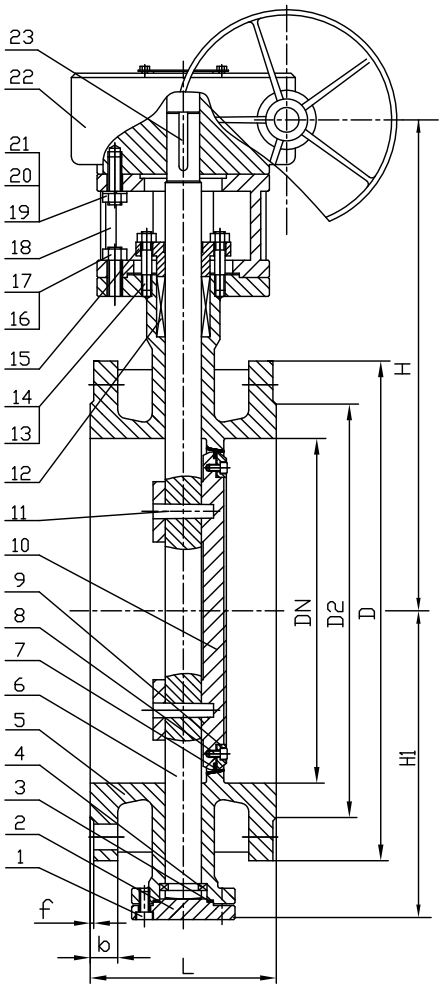

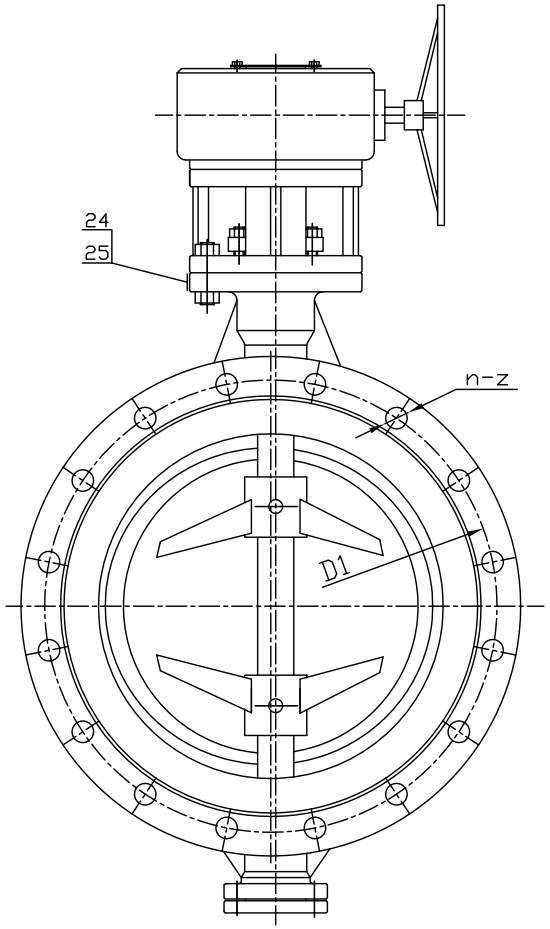

SIZE	DN	L	D	D1	D2	b	f	n-z	W	H	H1	WT(kg)
56″	1400	530	1745	1651	1575	124.3	2	48-47.6	700	1335	894	3200
48″	1200	470	1510	1422.4	1359	108.4	2	44-41.3	700	1112	887	2150
40″	1000	410	1290	1200.2	1124	90.9	2	36-41.3	700	956	776	1600
36″	900	330	1170	1085.8	1022	81.4	2	32-41.3	600	932	720	1100
32″	800	318	1060	977.9	914	64	2	28-41.3	600	823	610	880
28″	700	292	925	863.6	800	72	2	28-35	500	800	545	610
24″	600	267	812.8	749.3	692.1	47.8	2	20-35.1	500	673	541	560
20″	500	229	698.5	635	584.2	42.9	2	20-31.75	400	573	430	375
18″	450	222	635	577.9	533.4	39.6	2	16-31.75	400	546	413	350
16″	400	216	596.9	539.8	469.9	36.6	2	16-28.4	400	520	402	270
14″	350	190	533.4	476.3	412.7	35.1	2	12-28.4	400	480	373	188
12″	300	178	482.6	431.8	381	31.75	2	12-25.4	400	426	315	130
10″	250	165	406.4	362	323.8	30.2	2	12-25.4	300	395	276	99
8″	200	152	342.9	298.5	269.7	28.4	2	8-22.4	300	352	234	64
6″	150	140	279.4	241.3	215.9	25.4	2	8-22.4	240	293	164	50
4″	100	127	228.6	190.5	157.2	24	2	8-19.1	240	250	128	28

No.	PARTNAME	MATERIAL	No.	PARTNAME	MATERIAL
			13	GLAND STUD	A193 B7
25	RIVET	304SS	12	PACKING	GRAPHITE
24	NAMEPLATE	304SS	11	PIN	A276 316
23	KEY	CARBON STEEL	10	DISC	A351 CF8M
22	GEARBOX	ASSEMBLY	9	CLAMP RING	A105
21	GASKET	ALLOY STEEL	8	SCREW	A193 B7
20	NUT	A194 2H	7	Laminated seal	RPTFE
19	BOLT	A193 B7	6	SHAFT	A182 F316
18	YOKE	A216 WCB	5	BODY	A216 WCB+STL
17	NUT	A194 2H	4	HALF RING	A276 316
16	BOLT	A193 B7	3	GASKET	PTFE
15	GLAND	A216 WCB	2	BOTTOM COVER	A105
14	NUT	A194 2H	1	BOLT	A193 B7

DRAWING TITLE
API 609, CARBON STEEL, CLASS150, GEARBOX FLANGED, BUTTERFLY VALVE

CLIENT:

VENDOR PO REF:

EVC REF:

DESIGN CODE	API 609	TEST PRESSURES
FACE TO FACE DIMENSIONS	API 609	BODY 31.0 Barg
ENDS FLANGES DIMENSIONS	ASME B16.5/B16.47-A	SEAT 22.0 Barg
TESTING CODE	API 598	SEAT-AIR 6.0 Barg

SCALE		
DRAWN	AC	DATE:15/10/2015
CHECKED	DY	
APPROVED	AW	

Edmund
VALVE COMPANY (1965) LTD

CAD No.	DRAWING NUMBER:151015-001					REV
	AREA No.	FACILITY	TYPE	SED No.	SHT No.	01

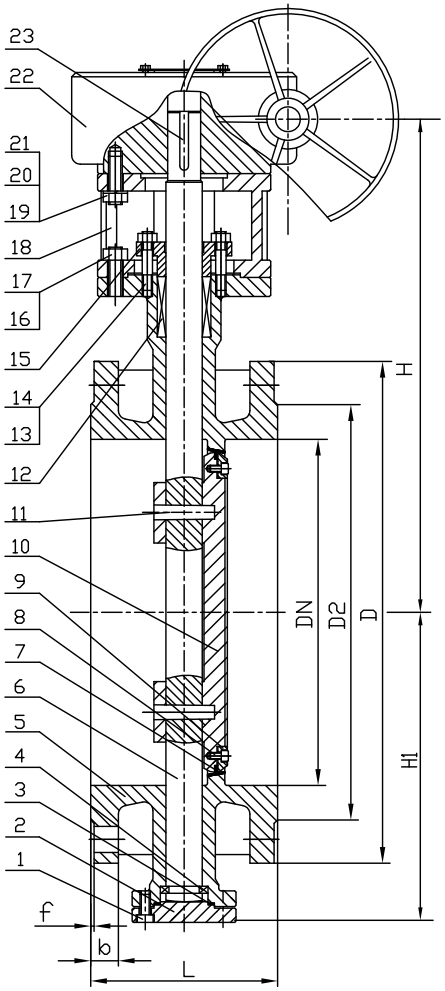

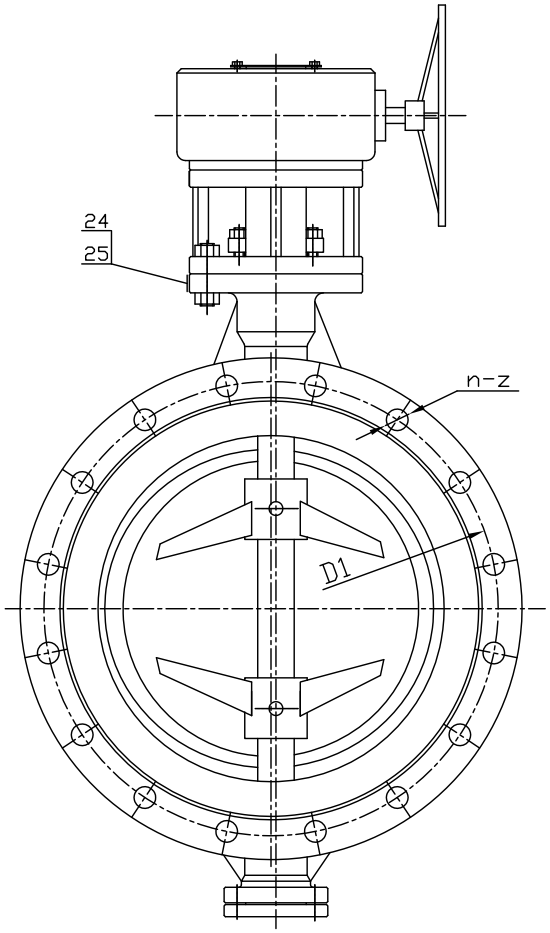

SIZE	DN	L	D	D1	D2	b	f	n-z	W	H	H1	WT(kg)
32″	800	318	1150	1054	914	99	2	28-51	600	787	580	880
28″	700	292	1035	939.8	800	87	2	28-44.5	600	765	510	610
24″	600	267	914.4	812.8	692.1	70	2	24-41.1	600	630	493	560
20″	500	229	774.7	685.8	584.2	63.5	2	24-35	500	531	390	375
18″	450	222	711.2	628.6	533.4	61	2	24-35	400	508	375	350
16″	400	216	647.7	571.5	469.9	57.1	2	20-35	400	484	368	270
14″	350	190	584.2	514.3	412.7	53.8	2	20-31.7	400	440	343	188
12″	300	178	520.7	450.8	381	50.8	2	16-31.7	500	398	290	130
10″	250	165	444.5	387.3	323.8	47.7	2	16-28.4	400	378	260	99
8″	200	152	381	330.2	269.7	41.1	2	12-25.4	300	340	224	64
6″	150	140	317.5	269.7	215.9	36.5	2	12-22.3	240	293	164	50
4″	100	127	254	200	157.2	31.7	2	8-22.3	240	250	128	28

No.	PARTNAME	MATERIAL	No.	PARTNAME	MATERIAL
			13	GLAND STUD	A193 B7
25	RIVET	304SS	12	PACKING	GRAPHITE
24	NAMEPLATE	304SS	11	PIN	A276 316
23	KEY	CARBON STEEL	10	DISC	A351 CF8M
22	GEARBOX	ASSEMBLY	9	CLAMP RING	A105
21	GASKET	ALLOY STEEL	8	SCREW	A193 B7
20	NUT	A194 2H	7	Laminated seal	RPTFE
19	BOLT	A193 B7	6	SHAFT	A182 F316
18	YOKE	A216 WCB	5	BODY	A216 WCB+STL
17	NUT	A194 2H	4	HALF RING	A276 316
16	BOLT	A193 B7	3	GASKET	PTFE
15	GLAND	A216 WCB	2	BOTTOM COVER	A105
14	NUT	A194 2H	1	BOLT	A193 B7

DRAWING TITLE
API 609, CARBON STEEL, CLASS300, GEARBOX FLANGED, BUTTERFLY VALVE

CLIENT:

VENDOR PO REF:

EVC REF:

DESIGN CODE	API 609	TEST PRESSURES
FACE TO FACE DIMENSIONS	API 609	BODY 78.0 Barg
ENDS FLANGES DIMENSIONS	ASME B16.5/B16.47-A	SEAT 56.0 Barg
TESTING CODE	API 598	SEAT-AIR 6.0 Barg

SCALE		
DRAWN	AC	DATE:15/10/2015
CHECKED	DY	
APPROVED	AW	

Edmund
VALVE COMPANY (1965) LTD

CAD No.	DRAWING NUMBER:151015-002					REV
	AREA No.	FACILITY	TYPE	SED No.	SHT No.	01

SIZE	DN	L	D	D1	D2	b	f	n-z	W	H	H1	WT(kg)
16″	400	310	685.8	603.3	469.9	76.2	6.4	20-41.1	600	816	380	302
14″	350	290	603.3	527.1	412.7	69.8	6.4	20-38.1	600	679	343	235
12″	300	270	558.8	489	381	66.5	6.4	20-35.1	600	649	290	172
10″	250	250	508	431.8	323.8	63.5	6.4	16-35.1	400	602	240	120
8″	200	230	419.1	349.3	269.7	55.6	6.4	12-31.75	400	469	230	82
6″	150	210	355.6	292.1	215.9	47.8	6.4	12-28.4	400	388	176	59

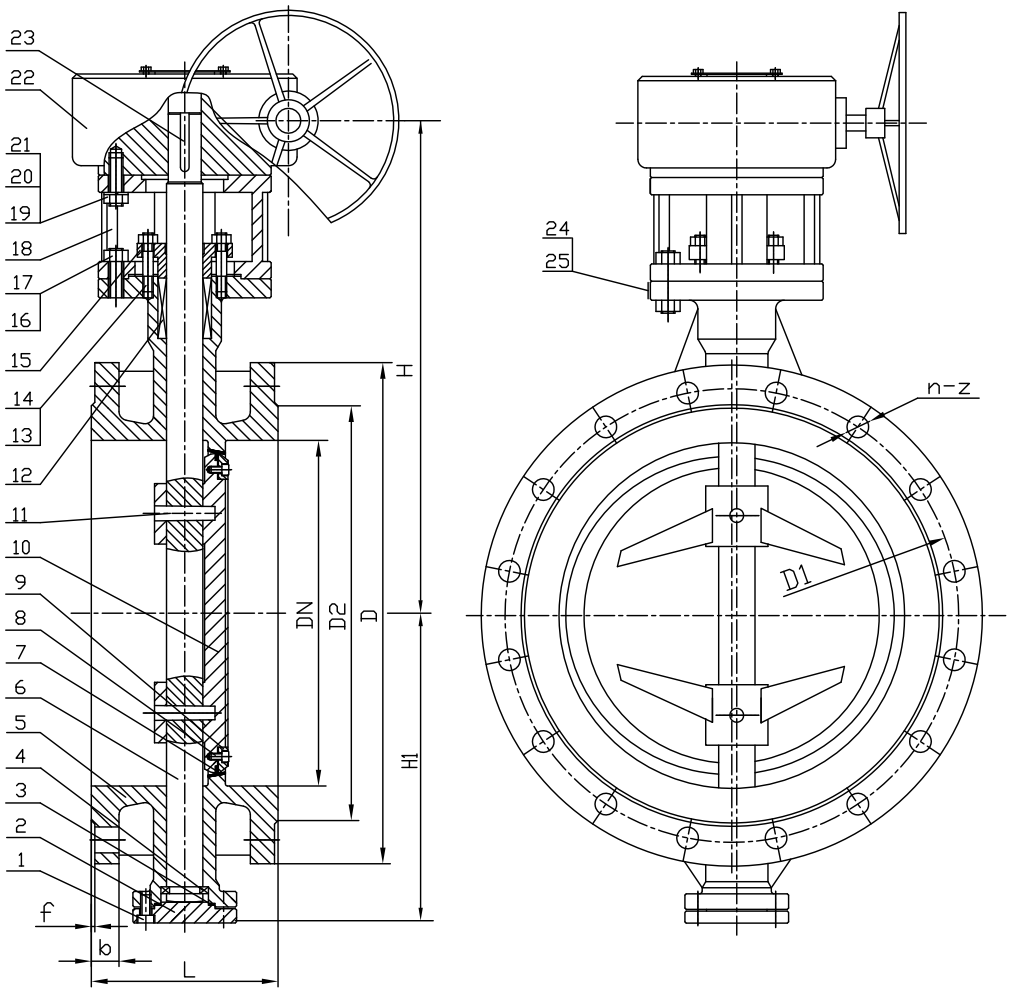

			13	GLAND STUD	A193 B7
25	RIVET	304SS	12	PACKING	GRAPHITE
24	NAMEPLATE	304SS	11	PIN	A276 316
23	KEY	CARBON STEEL	10	DISC	A351 CF8M
22	GEARBOX	ASSEMBLY	9	CLAMP RING	A105
21	GASKET	ALLOY STEEL	8	SCREW	A193 B7
20	NUT	A194 2H	7	Laminated seal	RPTFE
19	BOLT	A193 B7	6	SHAFT	A182 F316
18	YOKE	A216 WCB	5	BODY	A216 WCB+STL
17	NUT	A194 2H	4	HALF RING	A276 316
16	BOLT	A193 B7	3	GASKET	PTFE
15	GLAND	A216 WCB	2	BOTTOM COVER	A105
14	NUT	A194 2H	1	BOLT	A193 B7
No.	PARTNAME	MATERIAL	No.	PARTNAME	MATERIAL

DRAWING TITLE
API 609, CARBON STEEL, CLASS600, GEARBOX FLANGED, BUTTERFLY VALVE

CLIENT:

VENDOR PO REF:

EVC REF:

SCALE		
DRAWN	AC	DATE:15/10/2015
CHECKED	DY	
APPROVED	AW	

Edmund
VALVE COMPANY (1965) LTD

CAD No.	DRAWING NUMBER:151015-003					REV
	AREA No.	FACILITY	TYPE	SEQ No.	SHT No.	01

DESIGN CODE	API 609	TEST PRESSURES	
FACE TO FACE DIMENSIONS	API 609	BODY	153.0 Barg
ENDS FLANGES DIMENSIONS	ASME B16.5	SEAT	112.0 Barg
TESTING CODE	API 598	SEAT-AIR	6.0 Barg

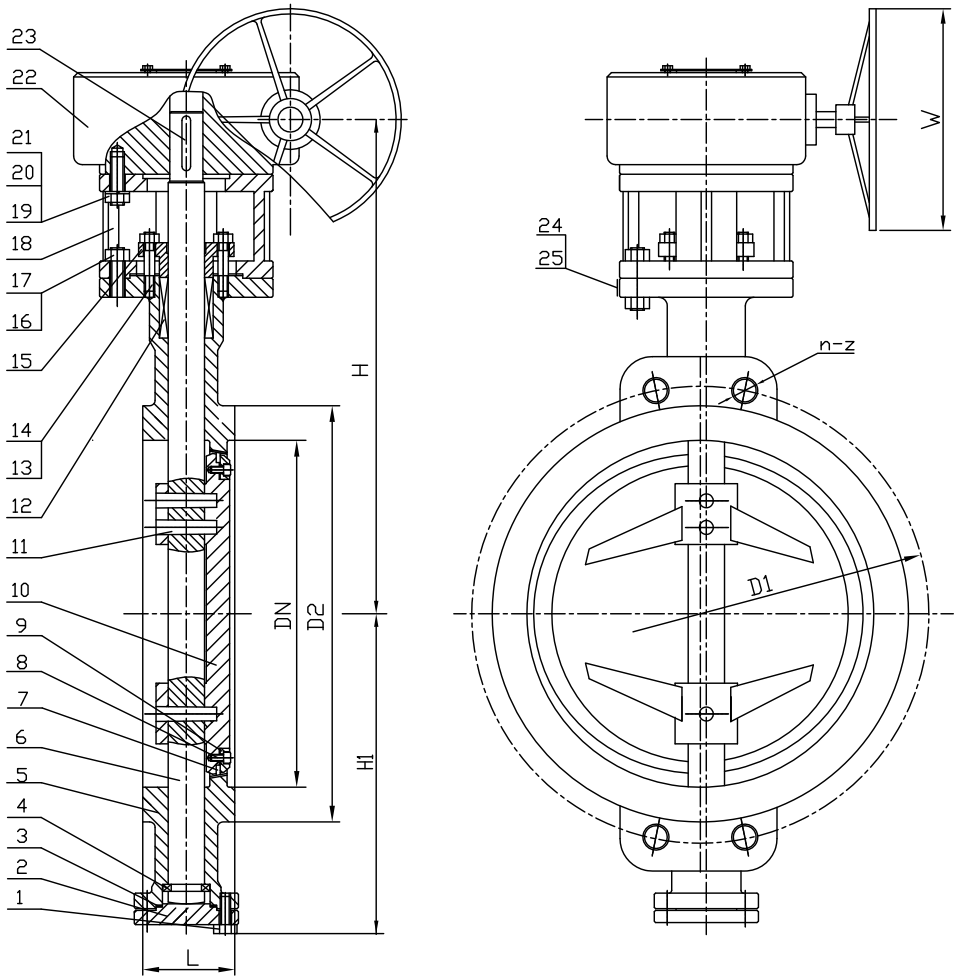

SIZE	DN	L	D1	D2	f	n-z	W	H	H1	WT(kg)
32″	800	190	914.4	857	2	28-35	600	823	610	650
28″	700	165	863.6	800	2	28-35	500	800	545	450
24″	600	154	749.3	692.1	2	20-35.1	500	673	541	380
20″	500	127	635	584.2	2	20-31.8	400	573	430	260
18″	450	114	578	533.4	2	16-31.8	400	546	413	191
16″	400	102	539.8	469.9	2	16-28.4	400	520	402	141
14″	350	92	476.3	412.7	2	12-28.4	400	480	373	122
12″	300	81	431.8	381	2	12-25.4	400	426	315	86
10″	250	71	362	323.8	2	12-25.4	300	395	276	69
8″	200	64	298.5	269.7	2	8-22.4	300	352	234	45
6″	150	58	241.3	215.9	2	8-22.4	240	293	164	29
4″	100	54	190.5	157.2	2	8-19	240	250	128	17

No.	PARTNAME	MATERIAL	No.	PARTNAME	MATERIAL
			13	GLAND STUD	A193 B7
25	RIVET	304SS	12	PACKING	GRAPHITE
24	NAMEPLATE	304SS	11	PIN	A276 316
23	KEY	CARBON STEEL	10	DISC	A351 CF8M
22	GEARBOX	ASSEMBLY	9	CLAMP RING	A105
21	GASKET	ALLOY STEEL	8	SCREW	A193 B7
20	NUT	A194 2H	7	Laminated seal	RPTFE
19	BOLT	A193 B7	6	SHAFT	A182 F316
18	YOKE	A216 WCB	5	BODY	A216 WCB+STL
17	NUT	A194 2H	4	HALF RING	A276 316
16	BOLT	A193 B7	3	GASKET	PTFE
15	GLAND	A216 WCB	2	BOTTOM COVER	A105
14	NUT	A194 2H	1	BOLT	A193 B7

DRAWING TITLE
API 609, CARBON STEEL, CLASS150, GEARBOX
WAFER , BUTTERFLY VALVE

CLIENT:

VENDOR PO REF:

EVC REF:

DESIGN CODE	API 609	TEST PRESSURES		
FACE TO FACE DIMENSIONS	API 609	BODY	31.0	Barg
ENDS FLANGES DIMENSIONS	ASME B16.5/B16.47-A	SEAT	22.0	Barg
TESTING CODE	API 598	SEAT-AIR	6.0	Barg

SCALE		
DRAWN	AC	DATE:14/10/2015
CHECKED	DY	
APPROVED	AW	

Edmund
VALVE COMPANY (1965) LTD

CAD No.	DRAWING NUMBER:151014-001					REV
	AREA No.	FACILITY	TYPE	SED No.	SHT No.	01

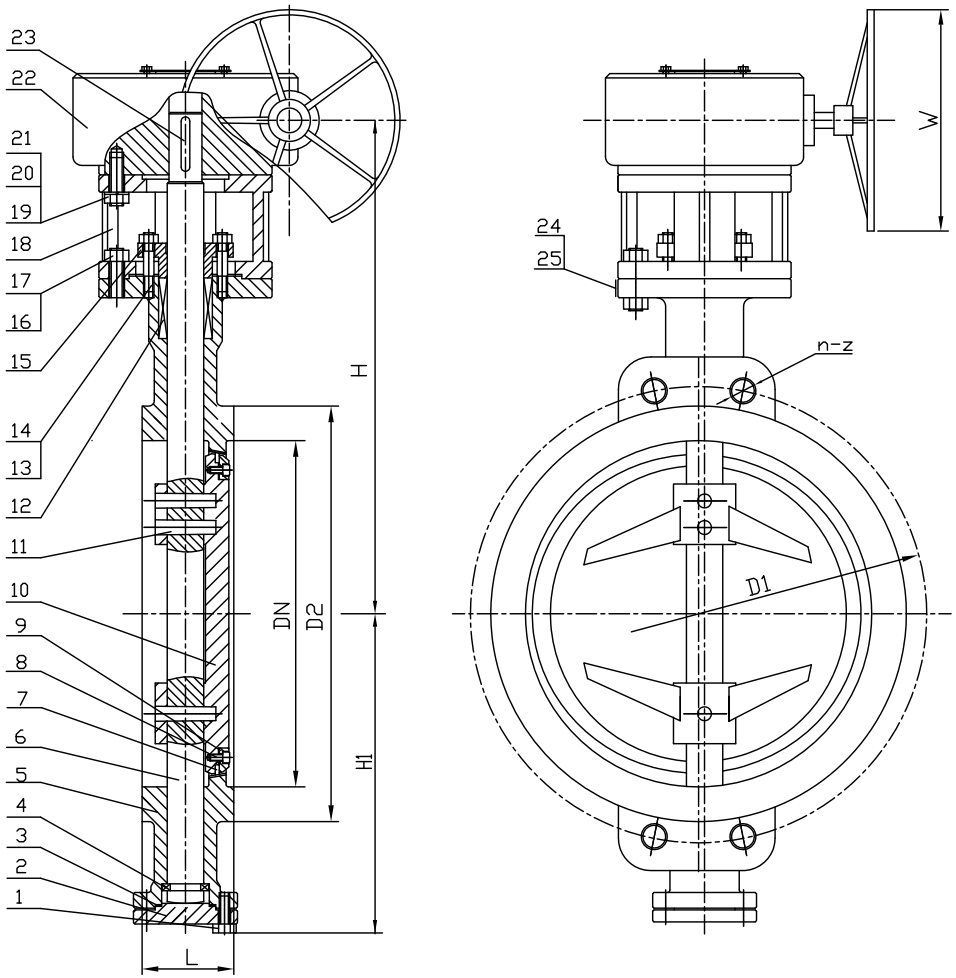

SIZE	DN	L	D1	D2	f	n-z	W	H	H1	WT(kg)
32″	800	241	1054	914	2	28-50.8	600	787	580	846
28″	700	229	939.8	800	2	28-44.5	600	765	510	723
24″	600	181	812.8	692.1	2	24-41.1	600	630	493	591
20″	500	159	685.8	584.2	2	24-35	500	531	390	405
18″	450	149	628.6	533.4	2	24-35	400	508	375	283
16″	400	133	571.5	469.9	2	20-35	400	484	368	245
14″	350	117	514.3	412.7	2	20-31.7	400	440	343	203
12″	300	92	450.8	381	2	16-31.7	500	398	290	135
10″	250	83	387.3	323.8	2	16-28.4	400	378	260	73
8″	200	73	330.2	269.7	2	12-25.4	300	340	224	55
6″	150	59	269.7	215.9	2	12-22.3	240	293	164	47
4″	100	54	200	157.2	2	8-22.3	240	250	128	25

No.	PARTNAME	MATERIAL	No.	PARTNAME	MATERIAL
			13	GLAND STUD	A193 B7
25	RIVET	304SS	12	PACKING	GRAPHITE
24	NAMEPLATE	304SS	11	PIN	A276 316
23	KEY	CARBON STEEL	10	DISC	A351 CF8M
22	GEARBOX	ASSEMBLY	9	CLAMP RING	A105
21	GASKET	ALLOY STEEL	8	SCREW	A193 B7
20	NUT	A194 2H	7	Laminated seal	RPTFE
19	BOLT	A193 B7	6	SHAFT	A182 F316
18	YOKE	A216 WCB	5	BODY	A216 WCB+STL
17	NUT	A194 2H	4	HALF RING	A276 316
16	BOLT	A193 B7	3	GASKET	PTFE
15	GLAND	A216 WCB	2	BOTTOM COVER	A105
14	NUT	A194 2H	1	BOLT	A193 B7

DRAWING TITLE
API 609, CARBON STEEL, CLASS300, GEARBOX
WAFER , BUTTERFLY VALVE

CLIENT:

VENDOR PO REF:

EVC REF:

DESIGN CODE	API 609	TEST PRESSURES
FACE TO FACE DIMENSIONS	API 609	BODY 78.0 Barg
ENDS FLANGES DIMENSIONS	ASME B16.5/B16.47-A	SEAT 56.0 Barg
TESTING CODE	API 598	SEAT-AIR 6.0 Barg

SCALE		
DRAWN	AC	DATE:14/10/2015
CHECKED	DY	
APPROVED	AW	

Edmund
VALVE COMPANY (1965) LTD

CAD No.	DRAWING NUMBER:151014-002					REV
	AREA No.	FACILITY	TYPE	SEQ No.	SHT No.	01

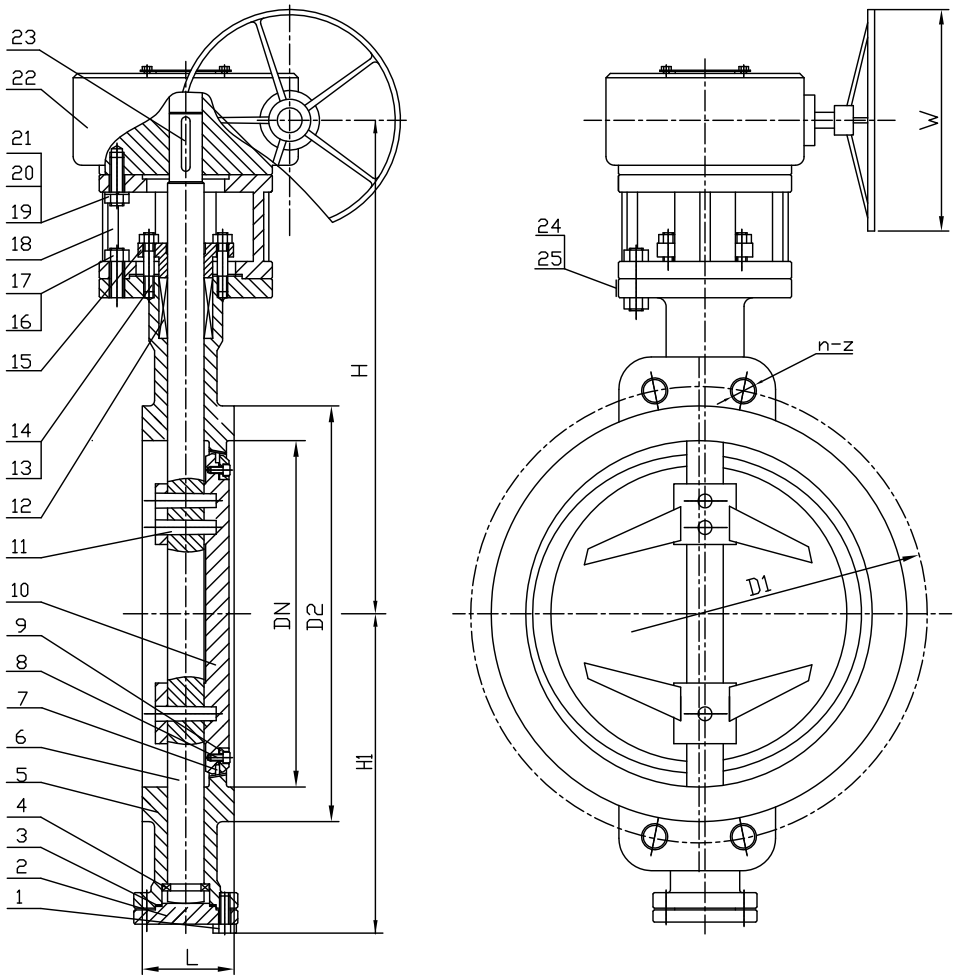

SIZE	DN	L	D1	D2	f	n-z	W	H	H1	WT(kg)
16″	400	178	603.3	469.9	6.4	20-41.1	600	816	380	320
14″	350	155	527.1	412.7	6.4	20-38.1	600	679	343	243
12″	300	140	489	381	6.4	20-35.1	600	649	290	150
10″	250	117	413.8	323.8	6.4	16-35.1	400	602	240	103
8″	200	102	349.3	269.7	6.4	12-31.75	400	469	230	70
6″	150	78	292.1	215.9	6.4	12-28.4	400	388	176	47

No.	PARTNAME	MATERIAL	No.	PARTNAME	MATERIAL
			13	GLAND STUD	A193 B7
25	RIVET	304SS	12	PACKING	GRAPHITE
24	NAMEPLATE	304SS	11	PIN	A276 316
23	KEY	CARBON STEEL	10	DISC	A351 CF8M
22	GEARBOX	ASSEMBLY	9	CLAMP RING	A105
21	GASKET	ALLOY STEEL	8	SCREW	A193 B7
20	NUT	A194 2H	7	Laminated seal	RPTFE
19	BOLT	A193 B7	6	SHAFT	A182 F316
18	YOKE	A216 WCB	5	BODY	A216 WCB+STL
17	NUT	A194 2H	4	HALF RING	A276 316
16	BOLT	A193 B7	3	GASKET	PTFE
15	GLAND	A216 WCB	2	BOTTOM COVER	A105
14	NUT	A194 2H	1	BOLT	A193 B7

DRAWING TITLE
API 609, CARBON STEEL, CLASS600, GEARBOX WAFER , BUTTERFLY VALVE

CLIENT:

VENDOR PO REF:

EVC REF:

DESIGN CODE	API 609	TEST PRESSURES
FACE TO FACE DIMENSIONS	API 609	BODY 153.0 Barg
ENDS FLANGES DIMENSIONS	ASME B16.5	SEAT 112.0 Barg
TESTING CODE	API 598	SEAT-AIR 6.0 Barg

SCALE		
DRAWN	AC	DATE:14/10/2015
CHECKED	DY	
APPROVED	AW	

Edmund
VALVE COMPANY (1965) LTD

CAD No.	DRAWING NUMBER:151014-003	REV
	AREA No. / FACILITY / TYPE / SED No. / SHT No.	01

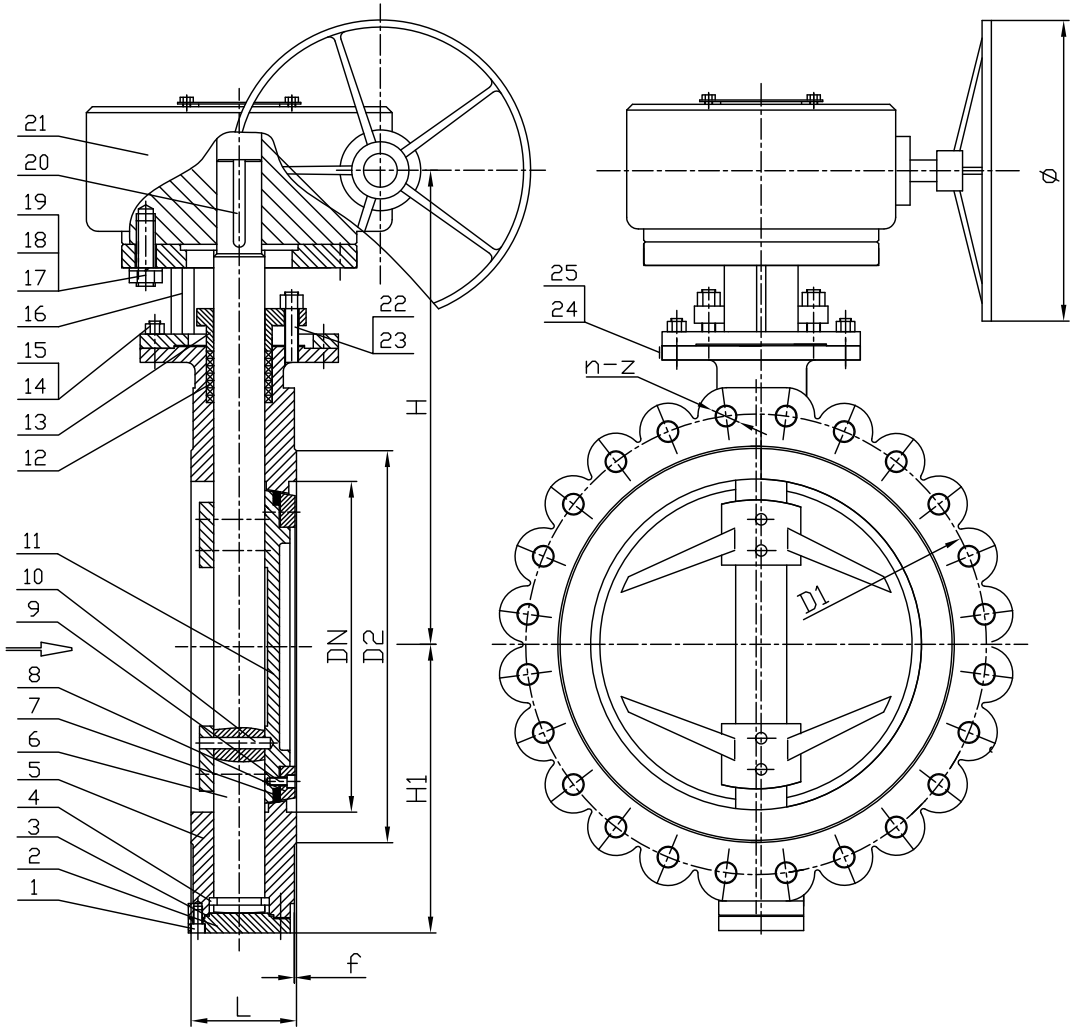

SIZE	DN	L	D1	D2	f	n-z	H	H1	WT(kg)
40″	1000	216	1200.2	1124	2	36-41.3	956	776	715
36″	900	203	1085.8	1022	2	32-41.3	932	720	590
32″	800	190	977.9	914	2	28-41.3	823	610	525
28″	700	165	863.6	800	2	28-35	800	545	386
24″	600	154	749.3	692.1	2	20-35.1	673	541	341
20″	500	127	635	584.2	2	20-31.75	573	430	248
18″	450	114	577.9	533.4	2	16-31.75	546	413	182
16″	400	102	539.8	469.9	2	16-28.4	520	402	132
14″	350	92	476.3	412.7	2	12-28.4	480	373	116
12″	300	81	431.8	381	2	12-25.4	426	315	75
10″	250	71	362	323.8	2	12-25.4	395	276	62
8″	200	64	298.5	269.7	2	8-22.4	352	234	47
6″	150	57	279.4	241.3	2	8-22.4	293	164	17
4″	100	54	190.5	157.2	2	8-19.1	250	128	13

No.	PART NAME	MATERIAL	No.	PART NAME	MATERIAL
			13	GLAND	A216 WCB
25	RIVET	304SS	12	PACKING	GRAPHITE
24	NAMEPLATE	304SS	11	DISC	A351 CF8M
23	NUT	A194 2H	10	PIN	A276 316
22	GLAND BOLT	A193 B7	9	SCREW	A193 B7
21	GEARBOX	ASSEMBLY	8	CLAMP RING	A105
20	KEY	CARBON STEEL	7	Laminated seal	RPTFE
19	BOLT	A193 B7	6	SHAFT	A182 F316
18	GASKET	ALLOY STEEL	5	BODY	A216 WCB+STL
17	NUT	A194 2H	4	HALF RING	A276 316
16	YOKE	A216 WCB	3	GASKET	PTFE
15	NUT	A194 2H	2	BOTTOM COVER	A105
14	BOLT	A193 B7	1	BOLT	A193 B7

DRAWING TITLE
API 609, CARBON STEEL, CLASS150, GEARBOX LUGGED, BUTTERFLY VALVE

CLIENT:

VENDOR PO REF:

EVC REF:

DESIGN CODE	API 609	TEST PRESSURES		
FACE TO FACE DIMENSIONS	API 609	BODY	31.0	Barg
ENDS FLANGES DIMENSIONS	ASME B16.5/B16.47-A	SEAT	22.0	Barg
TESTING CODE	API 598	SEAT-AIR	6.0	Barg

SCALE		
DRAWN	AC	DATE:16/10/2015
CHECKED	DY	
APPROVED	AW	

Edmund
VALVE COMPANY (1965) LTD

CAD No. | DRAWING NUMBER:151016-001 | REV 01

AREA No. | FACILITY | TYPE | SED No. | SHT No.

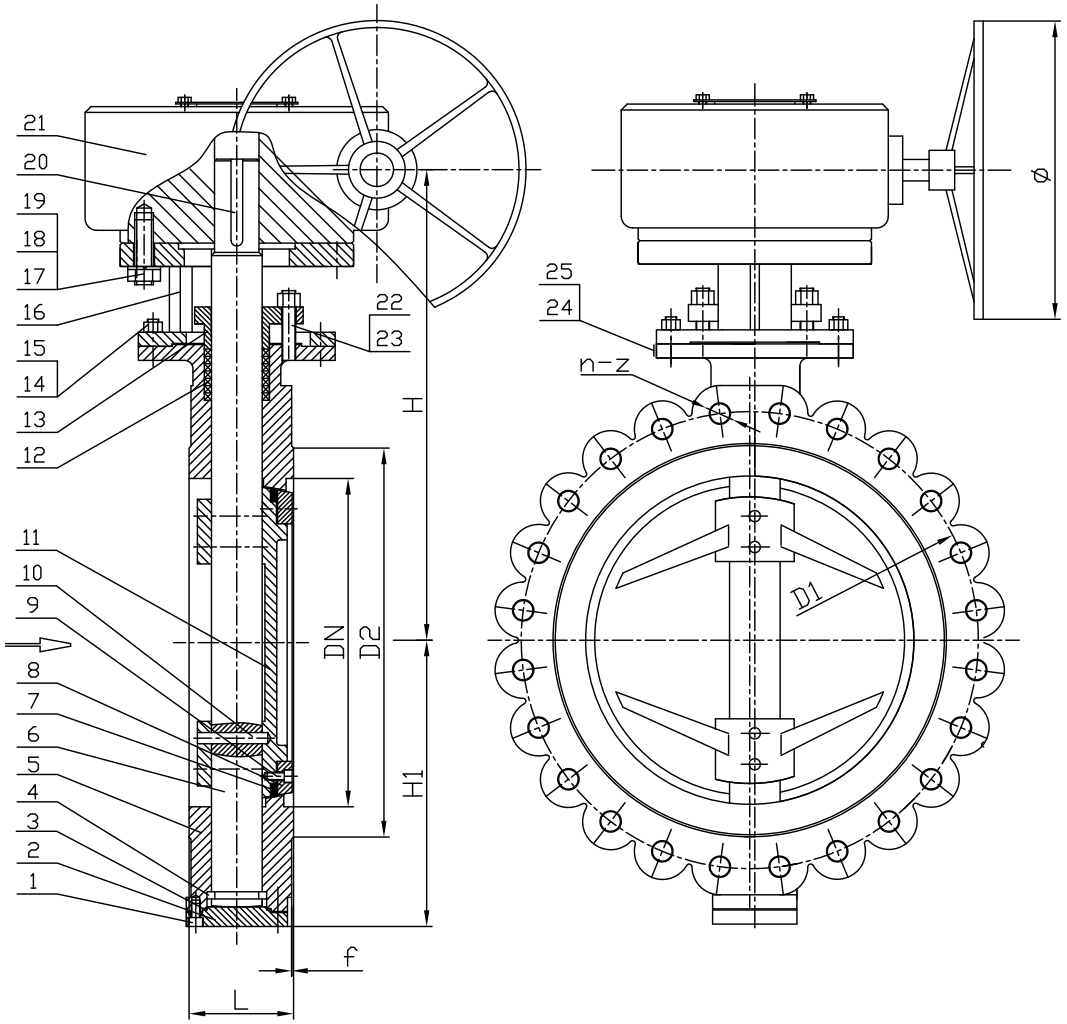

SIZE	DN	L	D1	D2	f	n-z	H	H1	WT(kg)
32″	800	241	1054	914	2	28-51	787	580	935
28″	700	229	939.8	800	2	28-44.5	765	510	785
24″	600	181	812.8	692.1	2	24-41.1	630	493	645
20″	500	159	685.8	584.2	2	24-35	531	390	520
18″	450	149	628.6	533.4	2	24-35	508	375	333
16″	400	133	571.5	469.9	2	20-35	484	368	268
14″	350	117	514.3	412.7	2	20-31.7	440	343	203
12″	300	92	450.8	381	2	16-31.7	398	290	142
10″	250	83	387.3	323.8	2	16-28.4	378	260	70
8″	200	73	330.2	269.7	2	12-25.4	340	224	67
6″	150	59	269.7	215.9	2	12-22.3	293	164	51
4″	100	54	200	157.2	2	8-22.3	250	128	29

No.	PART NAME	MATERIAL	No.	PART NAME	MATERIAL
			13	GLAND	A216 WCB
25	RIVET	304SS	12	PACKING	GRAPHITE
24	NAMEPLATE	304SS	11	DISC	A351 CF8M
23	NUT	A194 2H	10	PIN	A276 316
22	GLAND BOLT	A193 B7	9	SCREW	A193 B7
21	GEARBOX	ASSEMBLY	8	CLAMP RING	A105
20	KEY	CARBON STEEL	7	Laminated seal	RPTFE
19	BOLT	A193 B7	6	SHAFT	A182 F316
18	GASKET	ALLOY STEEL	5	BODY	A216 WCB+STL
17	NUT	A194 2H	4	HALF RING	A276 316
16	YOKE	A216 WCB	3	GASKET	PTFE
15	NUT	A194 2H	2	BOTTOM COVER	A105
14	BOLT	A193 B7	1	BOLT	A193 B7

DESIGN CODE	API 609	TEST PRESSURES		
FACE TO FACE DIMENSIONS	API 609	BODY	78.0	Barg
ENDS FLANGES DIMENSIONS	ASME B16.5/B16.47-A	SEAT	56.0	Barg
TESTING CODE	API 598	SEAT-AIR	6.0	Barg

SCALE		
DRAWN	AC	DATE:16/10/2015
CHECKED	DY	
APPROVED	AW	

DRAWING TITLE
API 609, CARBON STEEL, CLASS300, GEARBOX LUGGED, BUTTERFLY VALVE

CLIENT:

VENDOR PO REF:

EVC REF:

Edmund
VALVE COMPANY (1965) LTD

CAD No.

DRAWING NUMBER:151016-002

AREA No. | FACILITY | TYPE | SED No. | SHT No.

REV 01

SIZE	DN	L	D1	D2	f	n-z	H	H1	WT(kg)
16″	400	178	603.3	469.9	6.4	20-41.1	510	380	401
14″	350	155	527.1	412.7	6.4	20-38.1	480	343	333
12″	300	140	489	381	6.4	20-35.1	467	290	201
10″	250	114	431.8	323.8	6.4	16-35.1	460	240	141
8″	200	102	349.3	269.7	6.4	12-31.75	410	230	94
6″	150	78	292.1	215.9	6.4	12-28.4	345	176	56

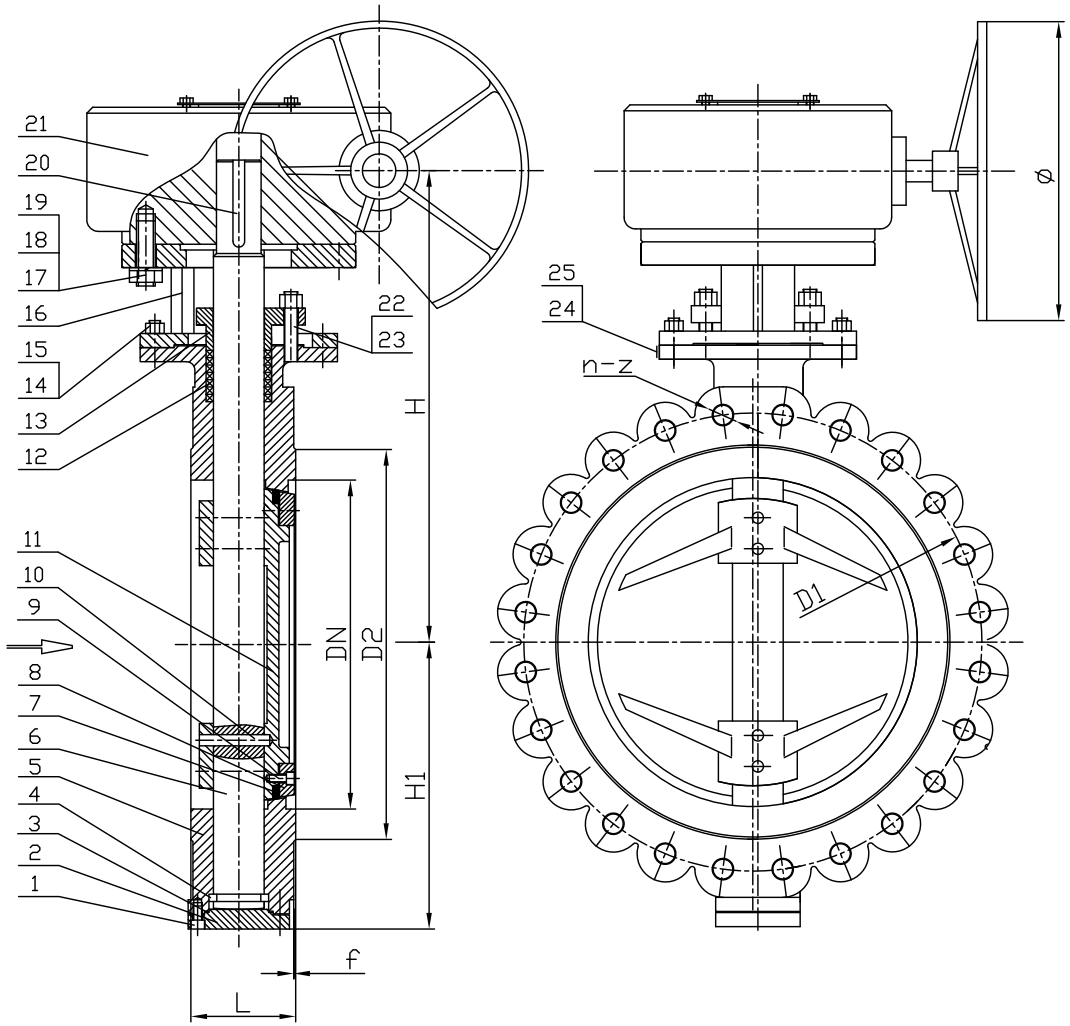

No.	PART NAME	MATERIAL	No.	PART NAME	MATERIAL
			13	GLAND	A216 WCB
25	RIVET	304SS	12	PACKING	GRAPHITE
24	NAMEPLATE	304SS	11	DISC	A351 CF8M
23	NUT	A194 2H	10	PIN	A276 316
22	GLAND BOLT	A193 B7	9	SCREW	A193 B7
21	GEARBOX	ASSEMBLY	8	CLAMP RING	A105
20	KEY	CARBON STEEL	7	Laminated seal	RPTFE
19	BOLT	A193 B7	6	SHAFT	A182 F316
18	GASKET	ALLOY STEEL	5	BODY	A216 WCB+STL
17	NUT	A194 2H	4	HALF RING	A276 316
16	YOKE	A216 WCB	3	GASKET	PTFE
15	NUT	A194 2H	2	BOTTOM COVER	A105
14	BOLT	A193 B7	1	BOLT	A193 B7

DRAWING TITLE
API 609, CARBON STEEL, CLASS600, GEARBOX
LUGGED, BUTTERFLY VALVE

CLIENT:

VENDOR PO REF:

EVC REF:

SCALE		
DRAWN	AC	DATE:16/10/2015
CHECKED	DY	
APPROVED	AW	

Edmund
VALVE COMPANY (1965) LTD

CAD No.	DRAWING NUMBER:151016-003					REV
	AREA No.	FACILITY	TYPE	SED No.	SHT No.	01

DESIGN CODE	API 609	TEST PRESSURES		
FACE TO FACE DIMENSIONS	API 609	BODY	153.0	Barg
ENDS FLANGES DIMENSIONS	ASME B16.5/B16.47-A	SEAT	112.0	Barg
TESTING CODE	API 598	SEAT-AIR	6.0	Barg

SIZE	A	B	C	D	d0	ISO5211	K	E	4-d	L	D1	4-Φ	&°	HXH
2"	161	80	43	52.9	12.6	F05	65	50	7	28	120.6	4-19	90°	9
2.5"	175	89	46	64.5	12.6	F05	65	50	7	28	139.7	4-19	90°	9
3"	181	95	46	78.8	12.6	F05	65	50	7	28	152.4	4-19	90°	9
4"	200	114	52	104	15.77	F07	90	70	10	30	190.5	4-19	45°	11
5"	213	127	56	123.3	18.92	F07	90	70	10	30	215.9	4-22.4	45°	14
6"	226	139	56	155.1	18.92	F07	90	70	10	30	241.3	4-22.4	45°	14
8"	260	175	60	202.5	22.1	F10	125	102	12	38	298.4	4-22.4	45°	17
10"	292	203	68	250.5	28.45	F10	125	102	12	38	361.9	4-25.4	30°	22
12"	337	242	78	301.5	31.6	F10	125	102	12	38	431.8	4-25.4	30°	22

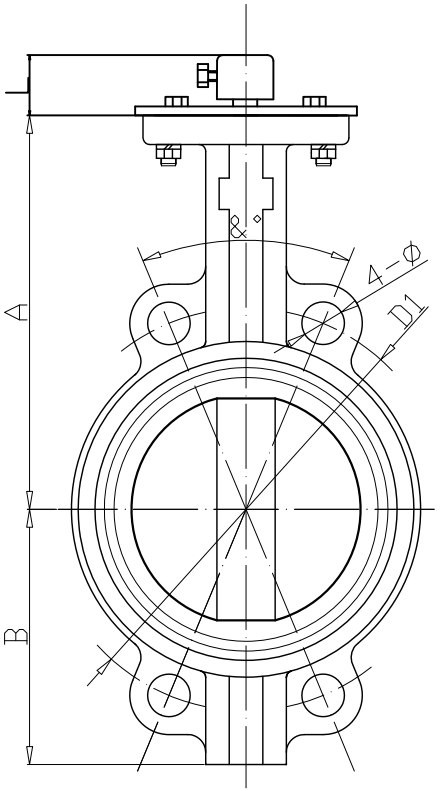

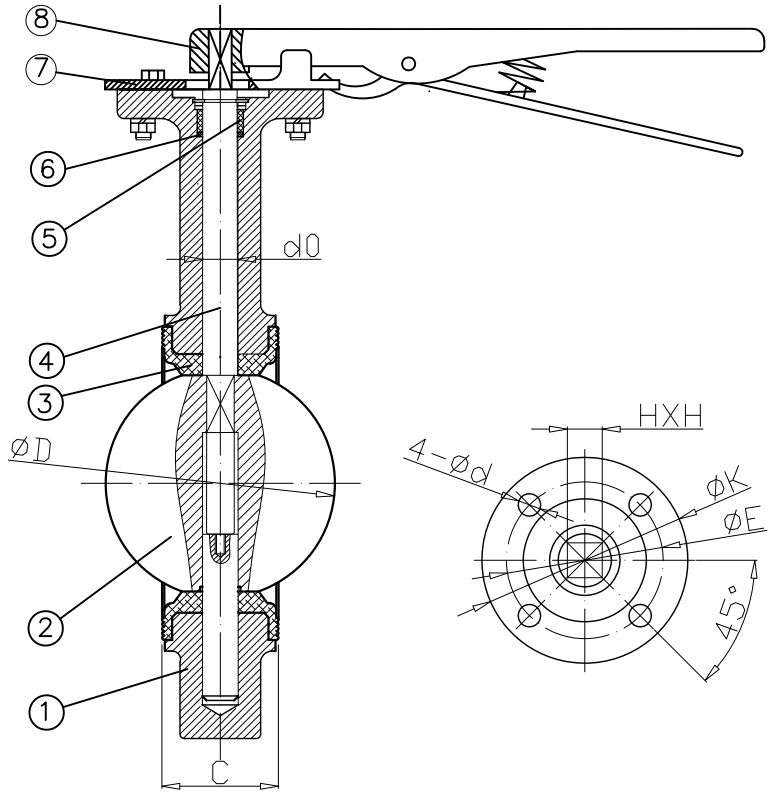

NO.	PARTS NAME	MATERIAL
8	LEVER	MALLEABLE IRON
7	INDICATOR	CARBON STEEL
6	X-RING	NBR
5	BUSHING	P. T. F. E.
4	STEM	A182 F6a
3	SEAT	EPDM
2	DISC	GGG40
1	BODY	GGG40

DESIGN CODE	API 609	TEST PRESSURES		
FACE TO FACE DIMENSIONS	API 609	BODY	31.0	Barg
ENDS FLANGES DIMENSIONS	ASME B16.5	SEAT	22.0	Barg
TESTING CODE	API 598	SEAT-AIR	6.0	Barg

SCALE		
DRAWN	AC	DATE:12/10/2015
CHECKED	DY	
APPROVED	AW	

DRAWING TITLE
API 609, DUCTILE IRON, CLASS150, HANDLEVER WAFER , RF, BUTTERFLY VALVE

CLIENT:

VENDOR PO REF:

EVC REF:

Edmund
VALVE COMPANY (1965) LTD

CAD No.	DRAWING NUMBER:151012-001					REV
	AREA No.	FACILITY	TYPE	SED No.	SHT No.	01