Edmund
VALVE COMPANY (1965) LTD

BUTTERFLY VALVE

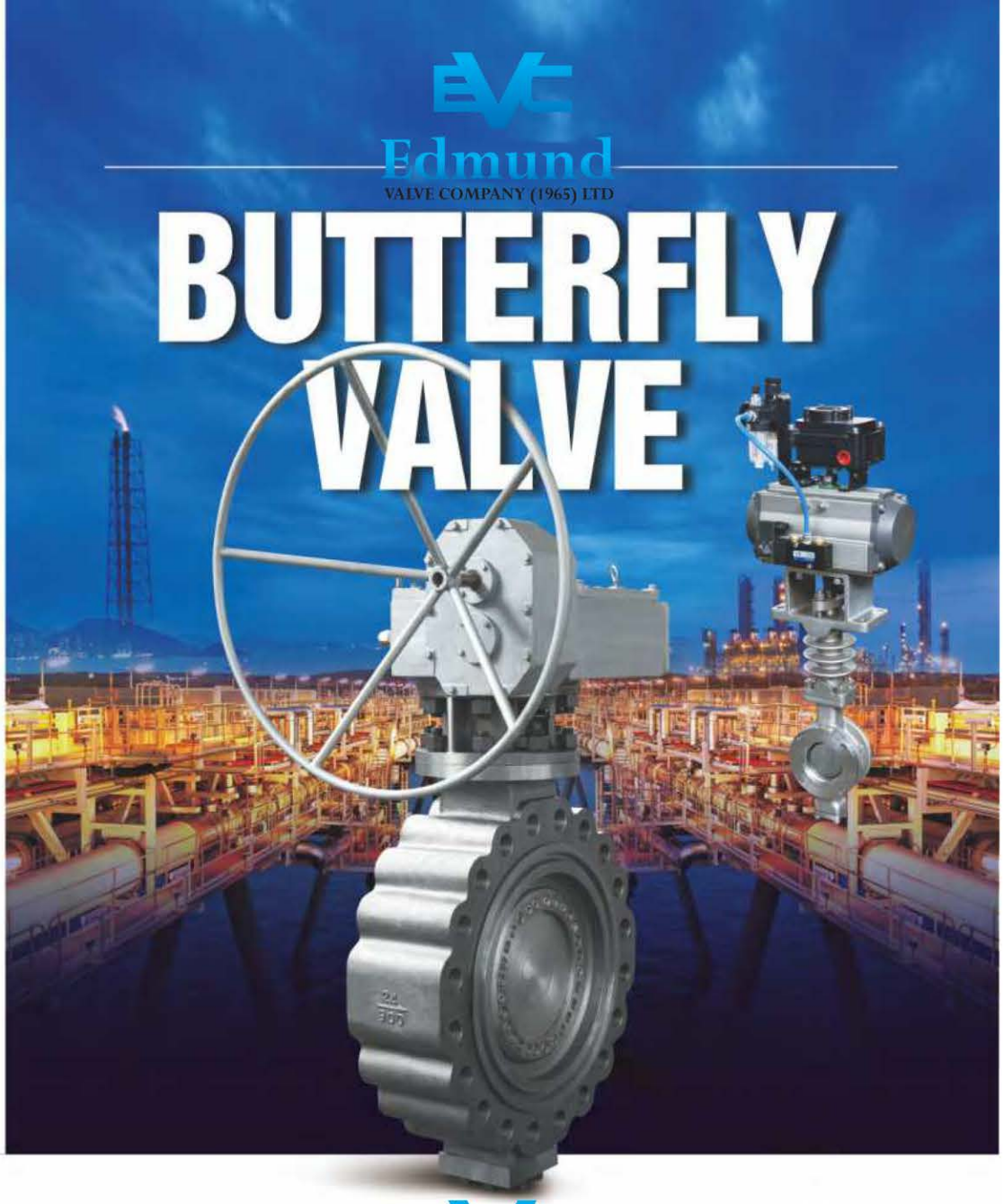

Edmund
VALVE COMPANY (1965) LTD

Catalogue

Edmund
VALVE COMPANY (1965) LTD

Triple Offset Butterfly Valve

The Design of Triple Offset Butterfly Valve
Common Standard
Production Range
Type of sealing structure
Characteristics of Triple Offset Butterfly Valve
Main Shape Size And Connection Dimension

High Performance Butterfly Valve

The Design of High Performance Butterfly Valve
Common Standard
Production Range
Type of sealing structure
Characteristics of High Performance Butterfly Valve
Main Shape Size And Connection Dimension

Double Offset Rubber Seal Butterfly Valve

The Design of Double Offset Rubber Seal Butterfly Valve
Common Standard
Production Range
Type of sealing structure
Characteristics of Double Offset Rubber Seal Butterfly Valve
Main Shape Size And Connection Dimension

Concentric Butterfly Valve

The Design of Concentric Rubber Seal Butterfly Valve
Common Standard
Production Range
Type of sealing structure
Characteristics of Concentric Butterfly Valve
Main Shape Size And Connection Dimension

Triple Offset Butterfly Valve

Edmund
VALVE COMPANY (1965) LTD

The triple offset butterfly valve has an extra unique angular eccentricity on the basis of double offset, which completely eliminates all friction between the seat and the sealing ring when opening to 90°. It has an obvious price performance ratio compared to gate valve and ball valve especially under some high pressure, high temperature and low temperature conditions. Furthermore, it's widely used on industrial pipelines, such as metallurgy, electric power, petrochemical engineering, water supply/drainage and municipal constructions for regulating flow and shutting off fluids.

Side Entry Cryogenic Triple Offset Butt-Welded Type Pneumatic Butterfly Valve

Triple Offset Metal To Metal Butt-Welded Butterfly Valve

Triple Offset Flange Type Pneumatic Butterfly Valve

Triple Offset Wafer Type Butterfly Valve

□ Triple Offset High-Temperature Flange Type Butterfly Valve

The Design of Triple Offset Butterfly Valve

Edmund
VALVE COMPANY (1965) LTD

The Design of Triple Offset Butterfly Valve

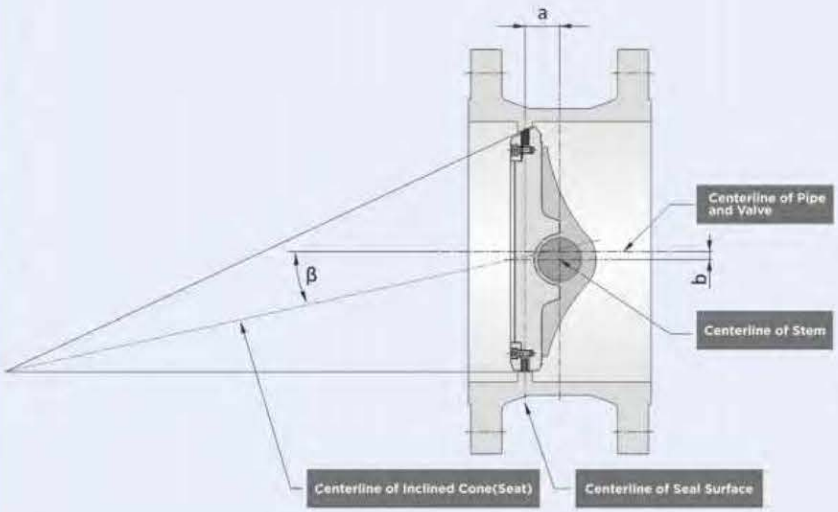

a **1st offset a:** The stem deviates from the centerline of the sealing surface

b **2nd offset b:** The stem deviates from the pipe and the centerline of the valve, both of which are designed to reduce friction between the seat and the sealing ring when opening and closing.

c **3rd offset β:** The centerline of the inclined cone angle created by the seal surface of the valve deviates from the pipe and the centerline of the valve

1. Geometrically, the seat is completely detached from the seal ring throughout the opening and closing. This unique offset design not only makes the best of cam effect, but also completely eliminates friction so that there is no friction between seat and sealing ring when opening to 90°, eliminating the possibilities of wear and leakage.
2. The characteristics of the contact between seat and seal ring are optimized. The contact angle of most gate valves is 3° to 6°, which is in the range of locking taper, resulting in high sealing torque and opening torque.
3. The contact angle of the valve is larger than the locking taper range, and the possibility of being stuck is excluded from the geometric shape, which ensures that the torque required for the switch will not change greatly throughout the service life of the valve.

The Design of Triple Offset Butterfly Valve

Edmund
VALVE COMPANY (1965) LTD

Common Standard

Design Criteria	Flange Standard	Face-to-face Length Standard	Test Standard
JB/T 8527	GB/T 9113	GB/T 12221	GB/T 13927
EN593	EN1092	EN558	EN12266-1
API 609	ASME B 16.5 ASME B 16.47B	API 609 ASME B 16.10	API 598

Production Range

Size Range	Pressure Range	Temperature Range	Connection	Material Range
DN50-DN4000	Within 1500LB	-196~700(°C)	Wafer, Lug, Double Falnge, Butt-welded	All Metal Material

Seal Structure Type

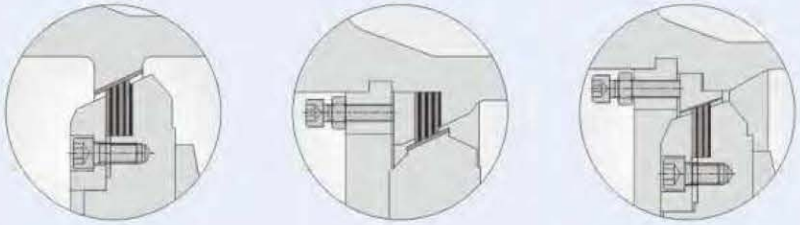

Seal Ring On The Disk | Seal Ring On The Body | Seal Ring With Replaceable Seat Structure

Materials of the Seal Rings: SS+Graphite / PTFE / Full Metal

Advantages of Triple Offset Butterfly Valve

① Seal with elastic metal steel in the interlayer enables the valve to have zero leakage performance.

② The friction-free design of right-angle rotation is realized by a unique triple offset design. There is no friction between the seat and seal ring when the valve opening from 0 to 90 degrees, which eliminates the possibilities of wear and leakage and prolongs the service life of the valve.

③ torque seal can meet the requirement of two-way zero leakage in long-term operation of the valve. The switch life of the valve allows five hundred thousand times.

④ All-metal structure with zero leakage performance makes the valve has essential fire safety characteristics.

⑤ The butterfly valve adopts precision casting process, including the body and the disk. This process has many advantages comparing with steel plate coiling process, the most important of which is that the overall strength of the valve is high, and the cost of it is also higher than that of the coiling process.

⑥ The external blow-out proof stem is safe and reliable and complies with the requirements of API 609.

Triple Offset Butterfly Valve

Wafer

Edmund
VALVE COMPANY (1965) LTD

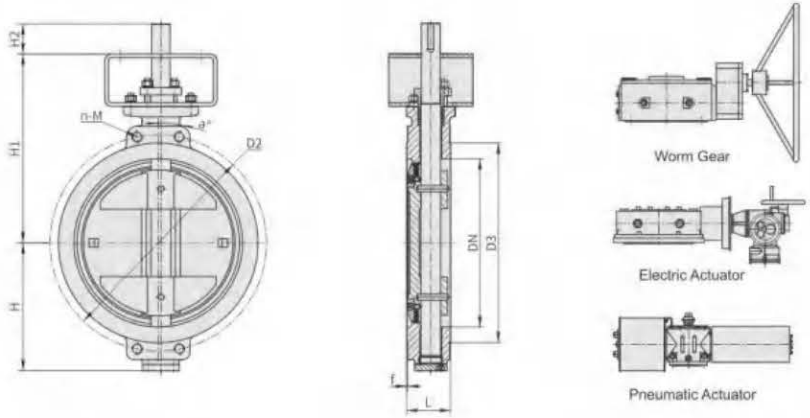

PN 10

DN	L	D2	D3	f	a°	n-M	ISO5211	Nm	Weight	CV	H	H1	H2
2"(DN50)	43	125	99	/	45	4-Φ18	F07	26	5	58	72	178	40
2.5"(DN65)	46	145	118	/	45	4-Φ18	F07	30	6	109	80	189	40
3"(DN80)	64	160	132	/	22.5	4-Φ18	F07	50	10	165	95	199	40
4"(DN100)	64	180	156	/	22.5	4-Φ18	F07	80	11	318	110	209	40
5"(DN125)	70	210	184	/	22.5	4-Φ18	F10	120	15	648	165	250	60
6"(DN150)	76	240	211	/	22.5	4-Φ22	F10	240	21	932	185	270	60
8"(DN200)	89	295	260	/	22.5	4-Φ22	F12	480	32	1970	225	310	60
10"(DN250)	114	350	312	/	15	4-Φ22	F12	760	45	2689	260	345	60
12"(DN300)	114	400	370	4	15	4-M20	F14	850	80	3930	290	395	80
14"(DN350)	127	460	429	4	11.25	4-M20	F16	1800	90	5290	338	455	80
16"(DN400)	140	515	470	4	11.25	4-M24	F16	2000	110	7726	375	490	90
18"(DN450)	152	565	520	4	9	4-M24	F16	2509	170	9856	405	520	90
20"(DN500)	152	620	570	5	9	4-M24	F16	3200	190	12180	435	550	100
24"(DN600)	154	725	682	5	9	4-M27	F25	6350	290	19800	476	632	125
28"(DN700)	165	840	794	5	7.5	4-M27	F25	6800	360	27600	520	670	150
32"(DN800)	190	950	901	5	7.5	4-M30	F25	10050	480	35800	578	706	150
36"(DN900)	203	1050	1001	5	6.428	4-M30	F25	12500	688	45600	650	795	150
40"(DN1000)	216	1160	1112	5	6.428	4-M33	F35	20000	800	65320	720	885	150
48"(DN1200)	254	1380	1328	5	5.625	4-M36	F35	30000	1400	96000	860	1020	150

Triple Offset Butterfly Valve

Wafer

Edmund
VALVE COMPANY (1965) LTD

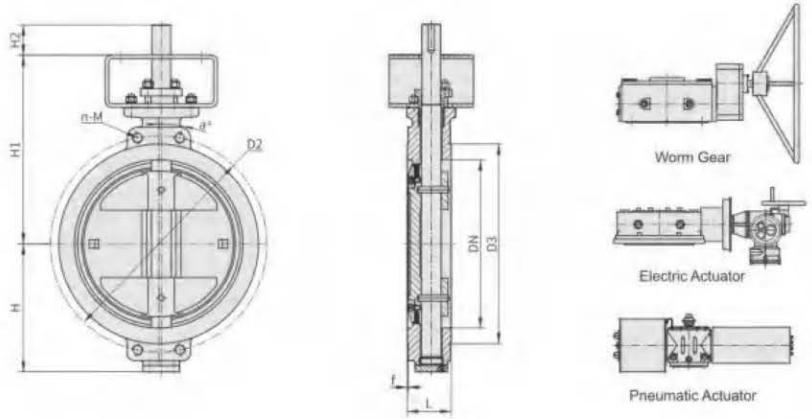

PN 16

DN	L	D2	D3	f	a°	n-M	ISO5211	Nm	Weight	CV	H	H1	H2
2"(DN50)	43	125	99	/	45	4-Φ18	F07	26	5	58	72	178	40
2.5"(DN65)	46	145	118	/	45	4-Φ18	F07	30	6	109	80	189	40
3"(DN80)	64	160	132	/	22.5	4-Φ18	F07	60	10	165	95	199	40
4"(DN100)	64	180	156	/	22.5	4-Φ18	F07	100	11	318	110	209	40
5"(DN125)	70	210	184	/	22.5	4-Φ18	F10	240	15	648	165	250	60
6"(DN150)	76	240	211	/	22.5	4-Φ22	F10	340	21	932	185	270	60
8"(DN200)	89	295	260	3	15	4-M20	F12	720	32	1970	225	310	60
10"(DN250)	114	355	312	/	15	4-Φ26	F12	950	45	2689	260	345	60
12"(DN300)	114	410	365	4	15	4-M24	F14	1300	80	3930	290	395	80
14"(DN350)	127	470	429	4	11.25	4-M24	F16	2200	90	5290	338	455	80
16"(DN400)	140	525	470	4	11.25	4-M27	F16	2340	110	7726	375	490	90
18"(DN450)	152	585	520	4	9	4-M27	F16	3300	170	9856	405	520	90
20"(DN500)	152	650	570	5	9	4-M30	F25	5000	190	12180	435	565	100
24"(DN600)	154	770	720	5	9	4-M33	F25	7000	290	19800	480	640	125
28"(DN700)	165	840	794	5	7.5	4-M33	F25	11000	360	27600	520	670	150
32"(DN800)	190	950	901	5	7.5	4-M36	F30	16000	480	35800	578	706	150
36"(DN900)	203	1050	1001	5	6.428	4-M36	F30	22000	688	45600	650	790	150
40"(DN1000)	216	1170	1112	5	6.428	4-M39	F35	28000	800	65320	720	885	150
48"(DN1200)	254	1390	1328	5	5.625	4-M45	F35	37000	1400	96000	860	1020	180

Triple Offset Butterfly Valve

Wafer

Edmund
VALVE COMPANY (1965) LTD

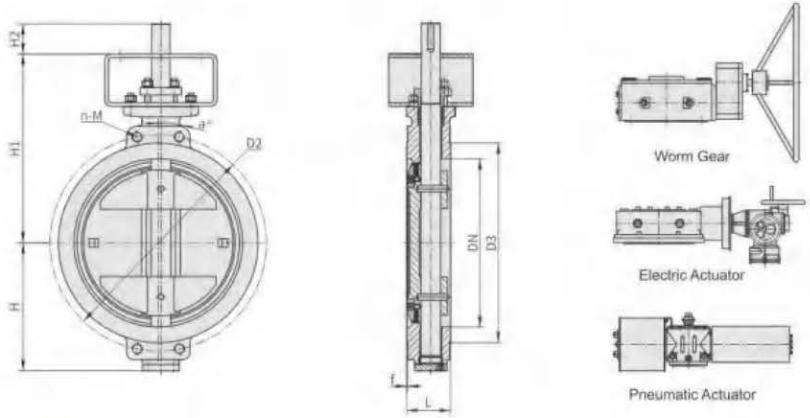

PN 25

DN	L	D2	D3	f	a°	n-M	ISO5211	Nm	Weight	CV	H	H1	H2
2"(DN50)	43	125	99	/	45	4-Φ18	F07	40	5.5	58	72	178	40
2.5"(DN65)	46	145	118	/	22.5	4-Φ18	F07	50	6.6	109	80	189	40
3"(DN80)	64	160	132	/	22.5	4-Φ18	F07	90	11	165	95	199	40
4"(DN100)	64	190	156	/	22.5	4-Φ22	F07	150	12.1	318	110	209	40
5"(DN125)	70	220	184	/	22.5	4-Φ26	F10	320	16.5	648	165	250	60
6"(DN150)	76	250	211	/	22.5	4-Φ26	F10	500	23.1	932	185	270	60
8"(DN200)	89	310	274	3	15	4-M24	F12	1020	35.2	1970	225	310	60
10"(DN250)	114	370	312	3	15	4-Φ30	F12	1300	49.5	2689	260	345	60
12"(DN300)	114	430	389	4	11.25	4-M27	F14	1800	88	3930	290	395	80
14"(DN350)	127	490	429	4	11.25	4-M30	F16	3200	99	5290	338	455	80
16"(DN400)	140	550	503	4	11.25	4-M33	F16	3600	121	7726	375	490	90
18"(DN450)	152	600	520	4	9	4-M33	F25	5200	187	9856	405	535	90
20"(DN500)	152	660	570	5	9	4-M33	F25	6200	209	12180	435	565	100
24"(DN600)	154	770	720	5	9	4-M36	F25	10600	319	19800	480	640	125
28"(DN700)	165	875	820	5	7.5	4-M39	F30	18000	396	27600	520	690	150
32"(DN800)	190	990	928	5	7.5	4-M45	F35	30000	528	35800	585	815	150
36"(DN900)	203	1090	1028	5	6.428	4-M45	F35	38000	756.8	45600	650	830	150
40"(DN1000)	216	1210	1140	5	6.428	4-M52	F35	42000	880	65320	720	915	180
48"(DN1200)	254	1420	1350	5	5.625	4-M52	F40	58000	1540	96000	860	1090	180

Triple Offset Butterfly Valve

Wafer

Edmund
VALVE COMPANY (1965) LTD

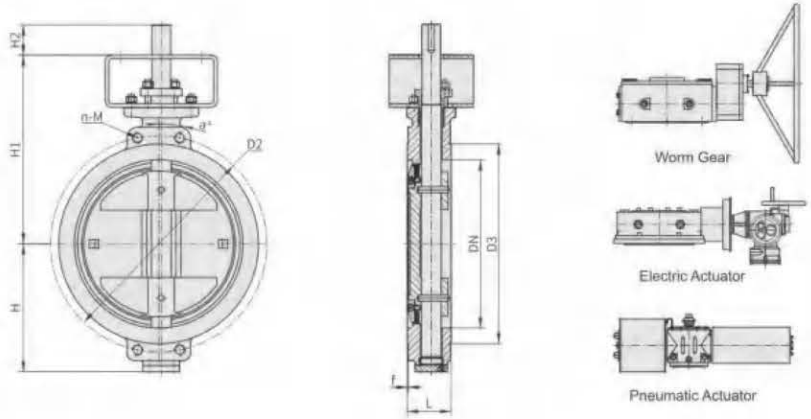

Class 150

DN	L	D2	D3	f	a°	n-M	ISO5211	Nm	Weight	CV	H	H1	H2
2"(DN50)	43	120.7	92.1	/	/	/	F07	26	5	58	65	160	40
2.5"(DN65)	46	139.7	104.8	/	/	/	F07	32	6	109	65	167	40
3"(DN80)	48	152.4	127	/	/	/	F07	80	10	165	85	197	40
4"(DN100)	54	190.5	157.2	/	/	/	F07	142	11	318	107	204	40
5"(DN125)	57	215.9	185.7	/	/	/	F10	264	15	648	138	237	50
6"(DN150)	57	241.3	215.9	/	/	/	F10	362	21	932	147	272	60
8"(DN200)	64	298.5	269.9	/	/	/	F12	785	32	1970	185	307	60
10"(DN250)	71	362	323.8	/	/	/	F14	1080	45	2689	215	354	60
12"(DN300)	81	431.8	381	2	15	4-7/8-9UNC	F14	1510	80	3930	252	395	60
14"(DN350)	92	476.3	412.8	2	15	4-1-8UNC	F16	2458	90	5290	287	445	80
16"(DN400)	102	539.8	469.9	2	11.25	4-1-8UNC	F25	2850	110	7726	317	490	90
18"(DN450)	114	577.9	533.4	2	11.25	4-1 1/8-8UN	F25	4536	170	9856	342	507	90
20"(DN500)	127	635	584.2	2	9	4-1 1/8-8UN	F25	6200	190	12180	372	575	90
22"(DN550)	154	692.2	641.4	2	9	4-1 1/4-8UN	F25	7300	250	15625	409	575	120
24"(DN600)	154	749.3	692.2	2	9	4-1 1/4-8UN	F25	8240	290	19800	439	605	120
26"(DN650)	165	744.5	711	2	5	8-3/4-10UNC	F30	10380	312	23850	510	645	120
28"(DN700)	165	795.3	762	2	4.5	8-3/4-10UNC	F30	11682	392	27600	536	680	120
30"(DN750)	190	846.1	813	2	4.09	8-3/4-10UNC	F30	14340	472	33700	580	710	150
32"(DN800)	190	900.1	864	2	3.75	8-3/4-10UNC	F30	17856	528	35800	581	705	150
34"(DN850)	203	957.3	921	2	4.5	8-7/8-9UNC	F30	23345	588	40400	636	825	150
36"(DN900)	203	1009.6	972	2	4.09	8-7/8-9UNC	F30	27200	648	45600	675	850	150
38"(DN950)	203	1070	1022	2	4.5	8-1-8UNC	F35	31000	784	50580	675	855	150
40"(DN1000)	216	1120.8	1080	2	4.09	8-1-8UNC	F35	32000	926.4	56000	725	885	150
42"(DN1050)	216	1171.6	1130	2	3.75	8-1-8UNC	F35	34000	960	61800	777	952	180
44"(DN1100)	254	1222.4	1181	2	3.461	8-1-8UNC	F35	36000	1000	67800	786	965	180
46"(DN1200)	254	1335.1	1289	2	3.75	8-1 1/8-8UN	F40	45400	1496.8	82500	847	1020	180
52"(DN1300)	279	1436.7	1391	2	3.461	8-1 1/8-8UN	F40	56000	1600	104336	896	1080	180
56"(DN1400)	279	1543	1492	2	3	8-1 1/8-8UN	F40	70500	2000	121000	980	1205	200
60"(DN1500)	318	1662.1	1600	2	3.461	8-1 1/4-8UN	F40	86000	2500	160380	995	1225	200

Triple Offset Butterfly Valve

Wafer

Edmund
VALVE COMPANY (1965) LTD

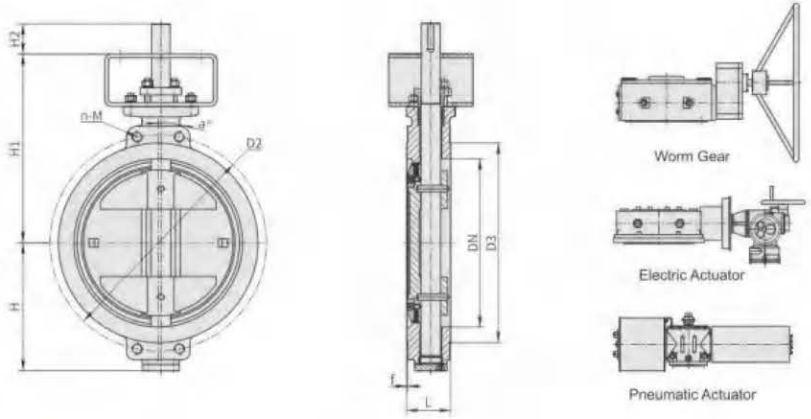

Class 300

DN	L	D2	D3	f	a°	n-M	ISO5211	Nm	Weight	CV	H	H1	H2
2"(DN50)	43	127	92.1	/	/	/	F07	78	6	58	65	160	40
2.5"(DN65)	46	149.2	104.8	/	/	/	F07	88	7	109	85	167	40
3"(DN80)	48	168.3	127	/	/	/	F07	144	11	165	100	207	40
4"(DN100)	54	200	157.2	/	/	/	F07	258	13	318	120	222	45
5"(DN125)	59	235	185.7	2	22.5	4-3/4-10UNC	F10	412	21	648	165	272	60
6"(DN150)	59	269.9	215.9	2	15	4-3/4-10UNC	F12	798	24	682	185	292	60
8"(DN200)	73	330.2	269.9	2	15	4-7/8-9UNC	F14	1960	36	1230	215	345	80
10"(DN250)	83	387.4	323.8	2	11.25	4-1-8UNC	F16	2270	57.6	2370	252	400	80
12"(DN300)	92	450.8	381	2	11.25	4-1 1/8-8UN	F16	2780	80	3520	282	440	85
14"(DN350)	117	514.4	412.8	2	9	4-1 1/8-8UN	F25	5680	110	4782	330	485	90
16"(DN400)	133	571.5	469.9	2	9	4-1 1/4-8UN	F25	7800	160	6280	365	510	90
18"(DN450)	149	628.6	533.4	2	7.5	4-1 1/4-8UN	F25	8956	240	7980	405	550	120
20"(DN500)	159	685.8	584.2	2	7.5	4-1 1/4-8UN	F30	11518	300	10800	435	580	120
22"(DN550)	181	743	641.4	2	7.5	4-1 1/2-8UN	F30	15800	350	13030	480	610	150
24"(DN600)	181	812.8	692.2	2	7.5	4-1 1/2-8UN	F30	18393	400	16180	515	645	150
26"(DN650)	229	803.3	737	2	5.625	8-1 1/4-8UN	F35	24000	500	19327	575	700	150
28"(DN700)	229	857.2	787	2	5	8-1 1/4-8UN	F35	27478	656	22410	600	725	180
30"(DN750)	229	920.8	845	2	5	8-1 3/8-8UN	F35	38971	800	27090	635	765	180
32"(DN800)	241	977.9	902	2	5.625	8-1 1/2-8UN	F40	41150	928	33050	665	855	180
34"(DN850)	241	1031.9	953	2	5	8-1 1/2-8UN	F40	48200	1000	37320	686	880	180
36"(DN900)	241	1089	1010	2	5.625	8-1 5/8-8UN	F40	53700	1148	42090	712	920	180
38"(DN950)	241	1139.8	1060	2	5	8-1 5/8-8UN	F40	63000	1280	47000	764	950	200
40"(DN1000)	300	1190.6	1114	2	4.5	8-1 5/8-8UN	F40	68370	1420	48964	784	980	200
42"(DN1050)	300	1244.6	1168	2	5	8-1 3/4-8UN	F40	75400	1560	53700	809	985	200
44"(DN1100)	300	1295.4	1219	2	4.5	8-1 3/4-8UN	F40	82650	1800	62500	839	1010	200
48"(DN1200)	360	1416	1327	2	4.5	8-1 7/8-8UN	F48	108000	2120	69350	916	1090	250

Triple Offset Butterfly Valve

Wafer

Edmund
VALVE COMPANY (1965) LTD

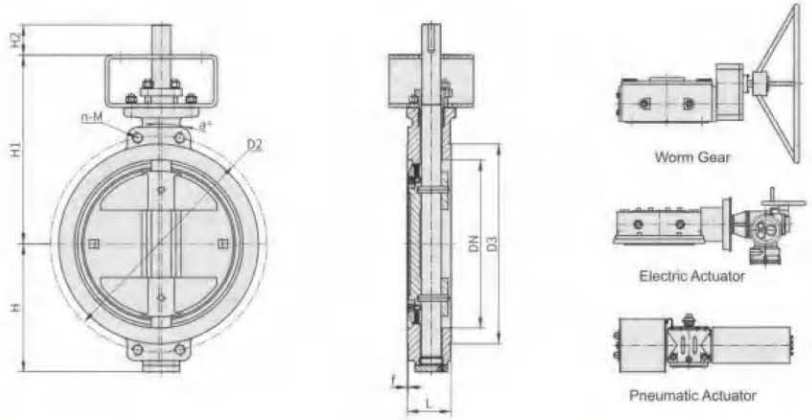

Class 600

DN	L	D2	D3	f	a°	n-M	ISO5211	Nm	Weight	CV	H	H1	H2
2"(DN50)	54	127	92.1	7	22.5	4-5/8-11UNC	F07	162	7	42	82.5	190	40
2.5"(DN65)	54	149.2	104.8	7	22.5	4-3/4-10UNC	F07	208	9	72	95	210	40
3"(DN80)	54	168.3	127	7	22.5	4-3/4-10UNC	F10	340	13	107	100	227	40
4"(DN100)	64	215.9	157.2	7	22.5	4-7/8-9UNC	F12	633	42	250	120	242	60
5"(DN125)	78	266.7	185.7	7	22.5	4-1-8UNC	F12	960	45	416	188	282	60
6"(DN150)	78	292.1	215.9	7	15	4-1-8UNC	F16	1630	50	600	210	345	60
8"(DN200)	102	349.2	269.9	7	15	4-1 1/8-8UN	F16	3540	60	1079	245	380	80
10"(DN250)	117	431.8	323.8	7	11.25	4-1 1/4-8UN	F25	5462	105	1708	287	440	90
12"(DN300)	140	489	381	7	9	4-1 1/4-8UN	F25	6018	150	2620	315	475	90
14"(DN350)	155	527	412.8	7	9	4-1 3/8-8UN	F25	10913	220	4062	357	510	120
16"(DN400)	178	603.2	469.9	7	9	4-1 1/2-8UN	F30	15757	348.8	5292	401	570	150
18"(DN450)	200	654	533.4	7	9	4-1 5/8-8UN	F35	19805	509.6	7395	437	615	150
20"(DN500)	216	723.9	584.2	7	7.5	8-1 5/8-8UN	F35	25808	608	9320	543	670	150
22"(DN550)	232	777.7	641.4	7	7.5	8-1 3/4-8UN	F40	40258	650	12260	560	705	180
24"(DN600)	232	838.2	692.2	7	7.5	8-1 7/8-8UN	F40	44799	710.4	13578	597	735	180

Triple Offset Butterfly Valve

Lug

Edmund
VALVE COMPANY (1965) LTD

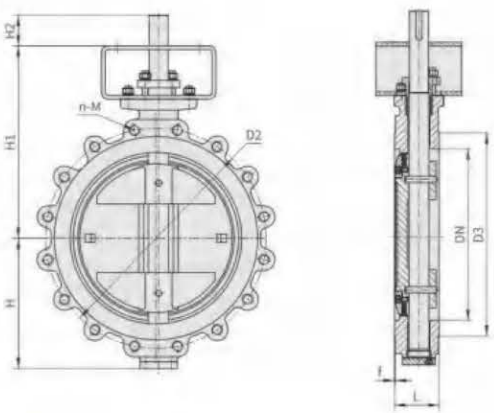

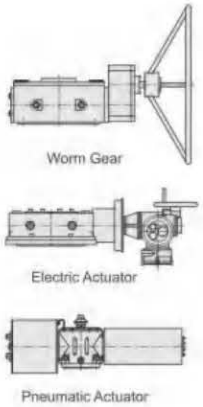

Class 150

DN	L	D2	D3	f	n-M	ISO5211	Nm	Weight	CV	H	H1	H2
2"(DN50)	43	120.7	92.1	2	4-5/8-11UNC	F07	26	5	58	65	160	40
2.5"(DN65)	46	139.7	104.8	2	4-5/8-11UNC	F07	32	6	109	85	167	40
3"(DN80)	48	152.4	127	2	4-5/8-11UNC	F07	80	8	165	85	197	40
4"(DN100)	54	190.5	157.2	2	8-5/8-11UNC	F07	142	12	318	107	204	40
5"(DN125)	57	215.9	185.7	2	8-3/4-10UNC	F10	264	20	648	138	237	50
6"(DN150)	57	241.3	215.9	2	8-3/4-10UNC	F10	362	25	932	147	272	60
8"(DN200)	64	298.5	269.9	2	8-3/4-10UNC	F12	785	36	1970	185	307	60
10"(DN250)	71	362	323.8	2	12-7/8-9UNC	F14	1080	60	2689	215	355	60
12"(DN300)	81	431.8	381	2	12-7/8-9UNC	F14	1510	80	3930	252	395	60
14"(DN350)	92	476.3	412.8	2	12-1-8UNC	F16	2458	120	5290	287	445	80
16"(DN400)	102	539.8	469.9	2	16-1-8UNC	F25	2850	140.8	7726	317	490	90
18"(DN450)	114	577.9	533.4	2	16-1 1/8-8UN	F25	4536	180	9856	342	507	90
20"(DN500)	127	635	584.2	2	20-1 1/8-8UN	F25	6200	220	12180	372	535	90
22"(DN550)	154	692.2	641.4	2	20-1 1/4-8UN	F25	7300	250	15625	409	575	120
24"(DN600)	154	749.3	692.2	2	20-1 1/4-8UN	F25	8240	300	19800	439	605	120
26"(DN650)	165	744.5	711	2	36-3/4-10UNC	F30	10380	400	23850	510	645	120
28"(DN700)	165	795.3	762	2	40-3/4-10UNC	F30	11682	456	27600	536	680	120
30"(DN750)	190	846.1	813	2	44-3/4-10UNC	F30	14340	512	33700	560	710	150
32"(DN800)	190	900.1	864	2	48-3/4-10UNC	F30	17856	580	35800	581	705	150
34"(DN850)	203	957.3	921	2	40-7/8-9UNC	F30	23345	620	40400	636	825	150
36"(DN900)	203	1009.6	972	2	44-7/8-9UNC	F30	27200	680	45600	675	850	150
38"(DN950)	203	1070	1022	2	40-1-8UNC	F35	31000	850	50560	675	855	150
40"(DN1000)	216	1120.8	1080	2	44-1-8UNC	F35	32000	1000	56000	725	885	150
42"(DN1050)	216	1171.6	1130	2	48-1-8UNC	F35	34000	1136	61800	777	952	180
44"(DN1100)	254	1222.4	1181	2	52-1-8UNC	F35	36000	1200	67800	786	965	180
48"(DN1200)	254	1335.1	1289	2	44-1 1/8-8UN	F40	45400	1337.6	82500	847	1020	180

Triple Offset Butterfly Valve

Lug

Edmund
VALVE COMPANY (1965) LTD

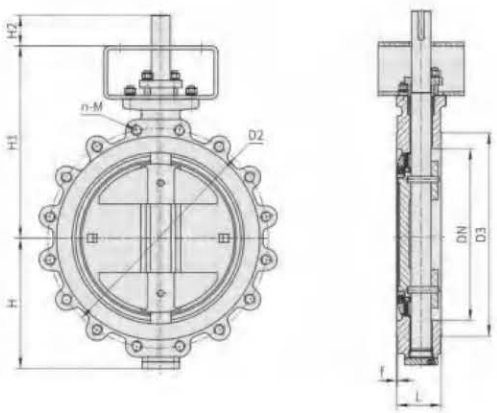

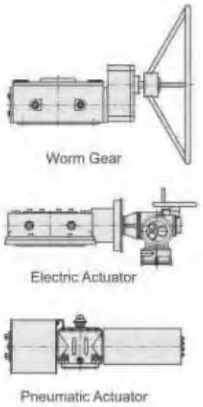

Class 300

DN	L	D2	D3	f	n-M	ISO5211	Nm	Weight	CV	H	H1	H2
2"(DN50)	43	127	92.1	2	8-5/8-11UNC	F07	78	7	58	65	160	40
2.5"(DN65)	46	149.2	104.8	2	8-3/4-10UNC	F07	88	9	109	85	167	40
3"(DN80)	48	168.3	127	2	8-3/4-10UNC	F07	144	13	165	85	182	40
4"(DN100)	54	200	157.2	2	8-3/4-10UNC	F07	258	18	318	100	204	45
5"(DN125)	59	235	185.7	2	8-3/4-10UNC	F10	412	25	648	165	272	60
6"(DN150)	59	269.9	215.9	2	12-3/4-10UNC	F12	798	32	682	185	292	60
8"(DN200)	73	330.2	269.9	2	12-7/8-9UNC	F14	1960	51.2	1230	215	345	80
10"(DN250)	83	387.4	323.8	2	16-1-8UNC	F16	2270	80	2370	252	400	80
12"(DN300)	92	450.8	381	2	16-1 1/8-8UN	F16	2780	125.6	3520	282	440	85
14"(DN350)	117	514.4	412.8	2	20-1 1/8-8UN	F25	5680	204	4782	330	485	90
16"(DN400)	133	571.5	469.9	2	20-1 1/4-8UN	F25	7800	276.8	6280	365	510	90
18"(DN450)	149	628.6	533.4	2	24-1 1/4-8UN	F25	8956	360	7980	405	550	120
20"(DN500)	159	685.8	584.2	2	24-1 1/4-8UN	F30	11518	460	10800	435	580	120
22"(DN550)	181	743	641.4	2	24-1 1/2-8UN	F30	15800	550	13030	480	610	150
24"(DN600)	181	812.8	692.2	2	24-1 1/2-8UN	F30	18393	630	16180	520	640	150
26"(DN650)	229	803.3	737	2	32-1 1/4-8UN	F35	24000	630	19327	575	700	150
28"(DN700)	229	857.2	787	2	36-1 1/4-8UN	F35	27478	800	22410	600	725	180
30"(DN750)	229	920.8	845	2	36-1 3/8-8UN	F35	38971	960	27090	640	765	180
32"(DN800)	241	977.9	902	2	32-1 1/2-8UN	F40	41150	1224	33050	665	855	180
34"(DN850)	241	1031.9	953	2	36-1 1/2-8UN	F40	48200	1280	37320	686	880	180
36"(DN900)	241	1089	1010	2	32-1 5/8-8UN	F40	53700	1336	42090	712	920	180
38"(DN950)	241	1139.8	1060	2	36-1 5/8-8UN	F40	63000	1580	47000	764	950	200
40"(DN1000)	300	1190.6	1114	2	40-1 5/8-8UN	F40	68370	1832	48964	784	980	200
42"(DN1050)	300	1244.6	1168	2	36-1 3/4-8UN	F40	75400	2137.6	53700	809	985	200
44"(DN1100)	300	1295.4	1219	2	40-1 3/4-8UN	F40	82650	2500	62500	839	1010	200
48"(DN1200)	360	1416	1327	2	40-1 7/8-8UN	F48	108000	2880	69350	916	1090	250

Triple Offset Butterfly Valve

Lug

Edmund
VALVE COMPANY (1965) LTD

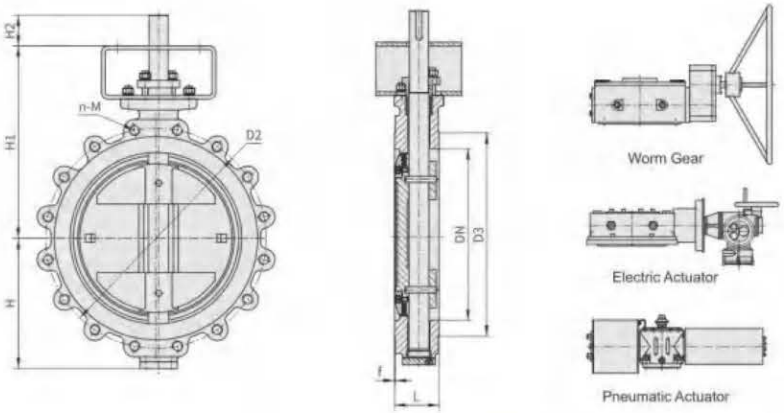

Class 600

DN	L	D2	D3	f	n-M	ISO5211	Nm	Weight	CV	H	H1	H2
2"(DN50)	54	127	92.1	7	8-5/8-11UNC	F07	162	9	42	82.5	190	40
2.5"(DN65)	54	149.2	104.8	7	8-3/4-10UNC	F07	208	13	72	95	210	40
3"(DN80)	54	168.3	127	7	8-3/4-10UNC	F10	340	17	107	100	227	40
4"(DN100)	64	215.9	157.2	7	8-7/8-9UNC	F12	633	25	250	120	242	60
5"(DN125)	78	266.7	185.7	7	8-1-8UNC	F12	960	43	416	188	282	60
6"(DN150)	78	292.1	215.9	7	12-1-8UNC	F16	1630	62	600	210	345	60
8"(DN200)	102	349.2	269.9	7	12-1 1/8-8UN	F16	3540	100	1079	245	380	80
10"(DN250)	117	431.8	323.8	7	16-1 1/4-8UN	F25	5462	140	1708	287	440	90
12"(DN300)	140	489	381	7	20-1 1/4-8UN	F25	6018	210	2620	315	475	90
14"(DN350)	155	527	412.8	7	20-1 3/8-8UN	F25	10913	350	4062	357	510	120
16"(DN400)	178	603.2	469.9	7	20-1 1/2-8UN	F30	15757	530	5292	401	570	150
18"(DN450)	200	654	533.4	7	20-1 5/8-8UN	F35	19805	720	7395	437	615	150
20"(DN500)	216	723.9	584.2	7	24-1 5/8-8UN	F35	25808	890	9320	543	670	150
22"(DN550)	232	777.7	641.4	7	24-1 3/4-8UN	F40	40258	1000	12260	560	705	180
24"(DN600)	232	838.2	692.2	7	24-1 7/8-8UN	F40	44799	1280	13578	597	735	180

Triple Offset Butterfly Valve

Double Flange

Edmund
VALVE COMPANY (1965) LTD

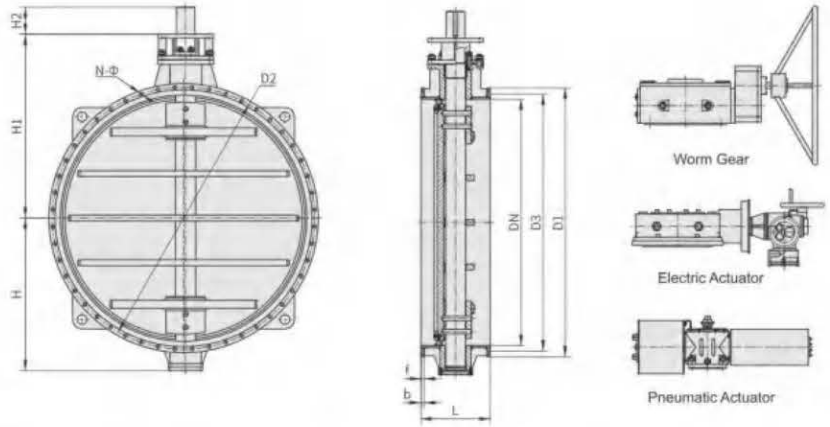

PN 2.5

DN	L	D1	D2	D3	N-Φ	b	f	ISO5211	Nm	Weight	CV	H	H1	H2
40"(DN1000)	410	1175	1120	1078	28-Φ30	26	5	F25	7000	840	75700	670	815	150
48"(DN1200)	470	1375	1320	1280	32-Φ30	26	5	F30	15000	1050	110000	760	965	150
56"(DN1400)	530	1575	1520	1480	36-Φ30	26	5	F30	21000	1500	151000	925	1120	150
64"(DN1600)	600	1790	1730	1690	40-Φ30	26	5	F35	30000	2000	258000	1020	1240	150
72"(DN1800)	670	1990	1930	1890	44-Φ30	26	5	F35	38000	2600	343000	1120	1365	180
80"(DN2000)	540	2190	2130	2090	48-Φ30	26	5	F40	48000	3700	424000	1250	1520	200
88"(DN2200)	590	2405	2340	2295	52-Φ33	28	5	F40	61000	4400	542000	1365	1620	200
96"(DN2400)	650	2605	2540	2495	56-Φ33	28	5	F48	75000	5100	665000	1425	1775	260
104"(DN2600)	700	2805	2740	2695	60-Φ33	28	5	F48	92000	6700	806000	1655	1925	290
112"(DN2800)	760	3030	2960	2910	64-Φ36	30	5	F48	100000	8000	950000	1755	2035	290
120"(DN3000)	810	3230	3160	3110	68-Φ36	30	5	F48	120000	9200	1080000	1865	2140	290

Triple Offset Butterfly Valve

Double Flange

Edmund
VALVE COMPANY (1965) LTD

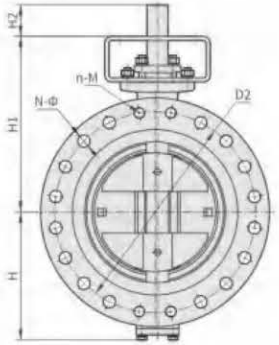

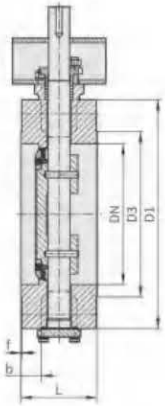

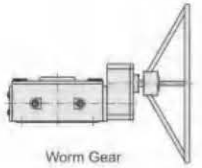

Worm Gear

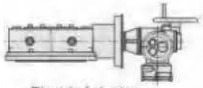

Electric Actuator

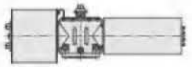

Pneumatic Actuator

PN 6

DN	L	D1	D2	D3	N-Φ	n-M	b	f	ISO5211	Nm	Weight	CV	H	H1	H2
2"(DN50)	108	140	110	88	4-Φ14	/	16	3	F07	26	14	58	72	178	40
2.5"(DN65)	112	160	130	108	4-Φ14	/	16	3	F07	30	17	109	80	189	40
3"(DN80)	114	190	150	124	4-Φ18	/	18	3	F07	45	20	165	95	199	40
4"(DN100)	127	210	170	144	4-Φ18	/	18	3	F07	60	24	318	105	209	40
5"(DN125)	140	240	200	174	8-Φ18	/	20	3	F10	100	36	648	165	250	60
6"(DN150)	140	265	225	199	8-Φ18	/	20	3	F10	180	40	932	185	270	60
8"(DN200)	152	320	280	254	8-Φ18	/	22	3	F12	320	62	1970	225	310	60
10"(DN250)	165	375	335	309	12-Φ18	/	24	3	F12	420	80	2689	260	345	60
12"(DN300)	178	440	395	363	12-Φ22	/	24	4	F14	700	100	3930	280	375	80
14"(DN350)	190	490	445	413	12-Φ22	/	24	4	F16	1600	112	5290	315	430	80
16"(DN400)	216	540	495	463	16-Φ22	/	24	4	F16	1700	136	7726	345	465	80
18"(DN450)	222	595	550	518	16-Φ22	/	24	4	F16	1800	176	9856	370	505	90
20"(DN500)	229	645	600	568	20-Φ22	/	26	4	F16	2200	255	12180	410	525	100
24"(DN600)	267	755	705	667	20-Φ26	/	26	5	F25	4600	324	19800	440	605	125
28"(DN700)	292	860	810	772	24-Φ26	/	26	5	F25	5000	475	34900	480	650	150
32"(DN800)	318	975	920	878	24-Φ30	/	26	5	F25	7000	600	46300	578	711	150
36"(DN900)	330	1075	1020	978	24-Φ30	/	26	5	F25	9500	712	60700	615	765	150
40"(DN1000)	410	1175	1120	1078	28-Φ30	/	26	5	F25	12000	880	75700	665	815	150
48"(DN1200)	470	1405	1340	1295	32-Φ33	/	28	5	F35	26000	1135	110000	760	965	150
56"(DN1400)	530	1630	1560	1510	36-Φ36	/	32	5	F35	38000	1600	151000	925	1120	180
64"(DN1600)	600	1830	1760	1710	40-Φ36	/	34	5	F35	48000	2200	232000	1030	1240	180
72"(DN1800)	670	2045	1970	1918	44-Φ39	/	36	5	F40	68000	2800	296000	1130	1365	250
80"(DN2000)	540	2265	2180	2125	48-Φ42	/	38	5	F48	88000	4000	380000	1250	1520	250

Triple Offset Butterfly Valve

Double Flange

Edmund
VALVE COMPANY (1965) LTD

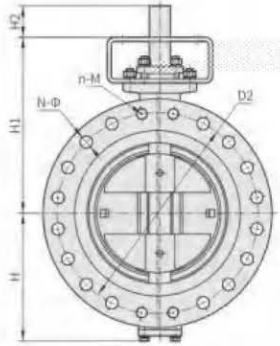

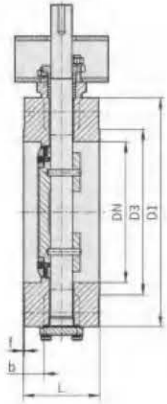

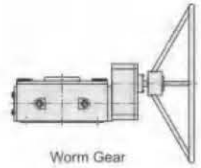

Worm Gear

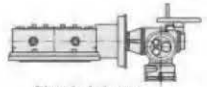

Electric Actuator

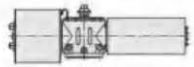

Pneumatic Actuator

PN 10

DN	L	D1	D2	D3	N-Φ	n-M	b	f	ISO5211	Nm	Weight	CV	H	H1	H2
2"(DN50)	108	165	125	99	4-Φ18	/	20	3	F07	26	14	58	82.5	178	40
2.5"(DN65)	112	185	145	118	4-Φ18	/	20	3	F07	30	17	109	92.5	189	40
3"(DN80)	114	200	160	132	8-Φ18	/	20	3	F07	50	20	165	100	199	40
4"(DN100)	127	220	180	156	8-Φ18	/	22	3	F07	80	24	318	110	209	40
5"(DN125)	140	250	210	184	8-Φ18	/	22	3	F10	120	36	648	165	250	60
6"(DN150)	140	285	240	211	8-Φ22	/	24	3	F10	240	40	932	185	270	60
8"(DN200)	152	340	295	266	8-Φ22	/	24	3	F12	480	62	1970	225	310	60
10"(DN250)	165	395	350	319	12-Φ22	/	26	3	F12	760	80	2689	260	345	60
12"(DN300)	178	445	400	370	12-Φ22	/	26	4	F14	850	100	3930	280	375	80
14"(DN350)	190	505	460	429	16-Φ22	/	26	4	F16	1800	124	5290	315	430	80
16"(DN400)	216	565	515	480	16-Φ26	/	26	4	F16	2000	145	7726	345	465	80
18"(DN450)	222	615	565	530	20-Φ26	/	28	4	F16	2509	195	9856	370	505	90
20"(DN500)	229	670	620	582	20-Φ26	/	28	4	F16	3200	245	12180	410	525	100
24"(DN600)	267	780	725	682	20-Φ30	/	30	5	F25	6350	330	19800	440	605	125
28"(DN700)	292	895	840	794	24-Φ30	/	30	5	F25	6800	470	27600	528.5	670	150
32"(DN800)	318	1015	950	901	24-Φ33	/	32	5	F25	10050	625	35800	580	730	150
36"(DN900)	330	1115	1050	1001	28-Φ33	/	34	5	F25	12500	760	45600	650	790	150
40"(DN1000)	410	1230	1160	1112	28-Φ36	/	34	5	F35	20000	970	65320	720	885	150
48"(DN1200)	470	1455	1380	1328	32-Φ39	/	38	5	F35	30000	1630	96000	830	1000	150
56"(DN1400)	530	1675	1580	1530	36-Φ42	/	42	5	F40	45000	2100	139700	980	1185	180
64"(DN1600)	600	1915	1820	1750	40-Φ48	/	46	5	F40	75000	3400	176000	1055	1325	250
72"(DN1800)	670	2115	2020	1950	44-Φ48	/	50	5	F48	100000	4200	250000	1155	1430	250
80"(DN2000)	540	2325	2230	2150	48-Φ48	/	54	5	F48	130000	5200	360000	1250	1520	250

Triple Offset Butterfly Valve

Double Flange

Edmund
VALVE COMPANY (1965) LTD

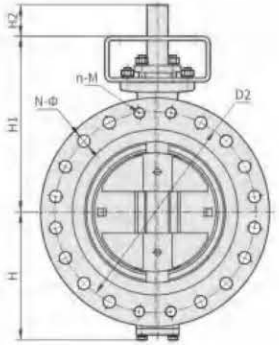

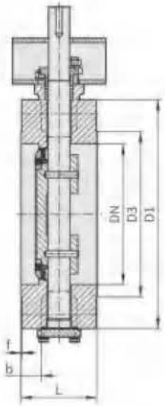

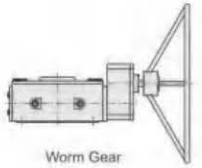

Worm Gear

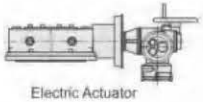

Electric Actuator

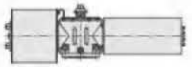

Pneumatic Actuator

PN 16

DN	L	D1	D2	D3	N-Φ	n-M	b	f	ISO5211	Nm	Weight	CV	H	H1	H2
2"(DN50)	108	165	125	99	4-Φ18	/	20	3	F07	26	14	58	82.5	178	40
2.5"(DN65)	112	185	145	118	4-Φ18	/	20	3	F07	30	17	109	92.5	189	40
3"(DN80)	114	200	160	132	8-Φ18	/	20	3	F07	60	20	165	100	199	40
4"(DN100)	127	220	180	156	8-Φ18	/	22	3	F07	100	24	318	110	209	40
5"(DN125)	140	250	210	184	8-Φ18	/	22	3	F10	240	36	648	165	250	60
6"(DN150)	140	285	240	211	8-Φ22	/	24	3	F10	340	40	932	185	270	60
8"(DN200)	152	340	295	266	12-Φ22	/	24	3	F12	720	62	1970	225	310	60
10"(DN250)	165	405	355	319	12-Φ26	/	26	3	F12	950	80	2689	260	345	60
12"(DN300)	178	460	410	370	12-Φ26	/	28	4	F14	1300	115	3930	290	395	80
14"(DN350)	190	520	470	429	16-Φ26	/	30	4	F16	2200	140	5290	338	455	80
16"(DN400)	216	580	525	480	16-Φ30	/	32	4	F16	2340	170	7726	375	490	90
18"(DN450)	222	640	585	548	20-Φ30	/	34	4	F16	3300	220	9856	370	505	90
20"(DN500)	229	715	650	609	20-Φ33	/	36	4	F25	5000	260	12180	435	565	100
24"(DN600)	267	840	770	720	20-Φ36	/	38	5	F25	7000	450	19800	486	635	125
28"(DN700)	292	910	840	794	24-Φ36	/	40	5	F25	11000	580	27600	529	670	150
32"(DN800)	318	1025	950	901	24-Φ39	/	42	5	F30	16000	750	35800	580	730	150
36"(DN900)	330	1125	1050	1001	28-Φ39	/	44	5	F30	22000	890	45600	650	790	150
40"(DN1000)	410	1255	1170	1112	28-Φ42	/	46	5	F35	28000	1100	65320	720	885	150
48"(DN1200)	470	1485	1390	1328	32-Φ48	/	52	5	F35	37000	1600	96000	843	1035	180
56"(DN1400)	530	1685	1590	1530	36-Φ48	/	58	5	F40	58000	2500	139700	980	1185	180
64"(DN1600)	600	1930	1820	1750	40-Φ56	/	64	5	F48	105000	3600	176000	1110	1335	250
72"(DN1800)	670	2130	2020	1950	44-Φ56	/	68	5	F48	156000	5000	250000	1155	1430	250
80"(DN2000)	540	2345	2230	2150	48-Φ62	/	70	5	F60	210000	5600	360000	1275	1545	290

Triple Offset Butterfly Valve

Double Flange

Edmund
VALVE COMPANY (1965) LTD

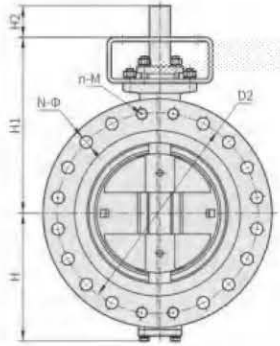

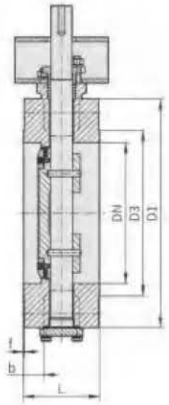

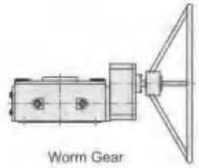

Worm Gear

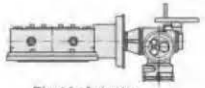

Electric Actuator

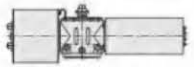

Pneumatic Actuator

PN 25

DN	L	D1	D2	D3	N-Φ	n-M	b	f	ISO5211	Nm	Weight	CV	H	H1	H2
2"(DN50)	108	165	125	99	4-Φ18	/	20	3	F07	40	14	58	82.5	178	40
2.5"(DN65)	112	185	145	118	8-Φ18	/	22	3	F07	50	17	109	92.5	189	40
3"(DN80)	114	200	160	132	8-Φ18	/	24	3	F07	90	20	165	100	199	40
4"(DN100)	127	235	190	156	8-Φ22	/	24	3	F07	150	24	318	117.5	209	40
5"(DN125)	140	270	220	184	8-Φ26	/	26	3	F10	320	36	648	165	250	60
6"(DN150)	140	300	250	211	4-Φ26	4-M24	28	3	F10	500	44	932	182	270	60
8"(DN200)	152	360	310	274	8-Φ26	4-M24	30	3	F12	1020	68.2	1970	225	310	60
10"(DN250)	165	425	370	330	8-Φ30	4-M27	32	3	F12	1300	88	2689	260	345	60
12"(DN300)	178	485	430	389	12-Φ30	4-M27	34	4	F14	1800	126.5	3930	290	395	80
14"(DN350)	190	555	490	448	12-Φ33	4-M30	38	4	F16	3200	154	5290	338	455	80
16"(DN400)	216	620	550	503	12-Φ36	4-M33	40	4	F16	3600	187	7726	375	490	90
18"(DN450)	222	670	600	548	16-Φ36	4-M33	42	4	F25	5200	242	9856	405	535	90
20"(DN500)	229	730	660	609	16-Φ36	4-M33	44	4	F25	6200	286	12180	435	565	100
24"(DN600)	267	845	770	720	16-Φ39	4-M36	46	5	F25	10600	495	19800	480	635	125
28"(DN700)	292	960	875	820	20-Φ42	4-M39	50	5	F30	18000	638	27600	528.5	690	150
32"(DN800)	318	1085	990	928	20-Φ48	4-M45	54	5	F35	30000	825	35800	585	815	150
36"(DN900)	330	1185	1090	1028	24-Φ48	4-M45	58	5	F35	38000	979	45600	650	830	150
40"(DN1000)	410	1320	1210	1140	24-Φ56	4-M52	62	5	F35	42000	1210	65320	720	915	180
48"(DN1200)	470	1530	1420	1350	32-Φ56	/	70	5	F40	58000	1760	96000	860	1090	180
56"(DN1400)	530	1755	1640	1560	36-Φ62	/	76	5	F48	88000	2750	139700	985	1230	200
64"(DN1600	600	1975	1860	1780	40-Φ62	/	84	5	F48	140000	3960	165000	1110	1335	250

Triple Offset Butterfly Valve

Double Flange

Edmund
VALVE COMPANY (1965) LTD

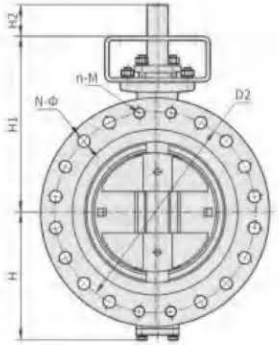

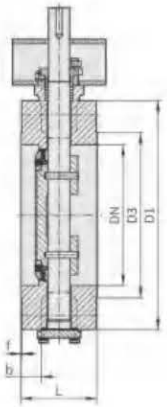

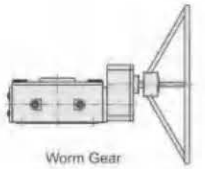

Worm Gear

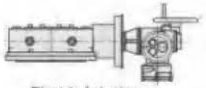

Electric Actuator

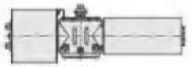

Pneumatic Actuator

Class 150

DN	L	D1	D2	D3	N-Φ	n-M	b	f	ISO5211	Nm	Weight	CV	H	H1	H2
2"(DN50)	108	150	120.7	92.1	4-Φ19.1	/	19.5	2	F07	26	10	58	75	160	40
2.5"(DN65)	112	180	139.7	104.8	4-Φ19.1	/	22.7	2	F07	32	14	109	90	172	40
3"(DN80)	114	190	152.4	127	4-Φ19.1	/	24.3	2	F07	80	17	165	95	197	40
4"(DN100)	127	230	190.5	157.2	8-Φ19.1	/	24.3	2	F07	142	23	318	115	204	40
5"(DN125)	140	255	215.9	185.7	8-Φ22.2	/	24.3	2	F10	264	32	648	138	260	50
6"(DN150)	140	280	241.3	215.9	8-Φ22.2	/	25.9	2	F10	362	41	932	147	272	60
8"(DN200)	152	345	298.5	269.9	8-Φ22.2	/	29	2	F12	785	50	1970	185	307	60
10"(DN250)	165	405	362	323.8	8-Φ25.4	4-7/8-9UNC	30.6	2	F14	1080	74	2689	215	355	60
12"(DN300)	178	485	431.8	381	8-Φ25.4	4-7/8-9UNC	32.2	2	F14	1510	120	3930	252	395	60
14"(DN350)	190	535	476.3	412.8	8-Φ28.6	4-1-8UNC	35.4	2	F16	2458	146	5290	287	440	80
16"(DN400)	216	595	539.8	469.9	12-Φ28.6	4-1-8UNC	37	2	F25	2850	200	7726	317	490	90
18"(DN450)	222	635	577.9	533.4	12-Φ31.8	4-1 1/8-8UN	40.1	2	F25	4536	236	9856	342	507	90
20"(DN500)	229	700	635	584.2	16-Φ31.8	4-1 1/8-8UN	43.3	2	F25	6200	300	12180	372	535	90
22"(DN550)	267	750	692.2	641.4	16-Φ34.9	4-1 1/4-8UN	46.5	2	F25	7300	400	15625	409	575	120
24"(DN600)	267	815	749.3	692.2	16-Φ34.9	4-1 1/4-8UN	48.1	2	F25	8240	460	19800	439	605	120
26"(DN650)	292	785	744.5	711	36-Φ22.2	/	41.8	2	F30	10380	460	23850	510	645	120
28"(DN700)	292	835	795.3	762	40-Φ22.2	/	45	2	F30	11682	500	27600	536	680	120
30"(DN750)	318	885	846.1	813	44-Φ22.2	/	45	2	F30	14340	570	33700	580	710	150
32"(DN800)	318	940	900.1	864	48-Φ22.2	/	46.6	2	F30	17856	620	35800	581	705	150
34"(DN850)	330	1005	957.3	921	40-Φ25.4	/	49.7	2	F30	23345	750	40400	636	825	150
36"(DN900)	330	1055	1009.6	972	44-Φ25.4	/	52.9	2	F30	27200	794	45600	675	850	150
38"(DN950)	410	1125	1070	1022	40-Φ28.6	/	54.5	2	F35	31000	1100	50560	675	855	150
40"(DN1000)	410	1175	1120.8	1080	44-Φ28.6	/	56.1	2	F35	32000	1250	56000	725	885	150
42"(DN1050)	410	1225	1171.6	1130	48-Φ28.6	/	59.3	2	F35	34000	1300	61800	777	952	180
44"(DN1100)	470	1275	1222.4	1181	52-Φ28.6	/	60.9	2	F35	36000	1336	67800	786	965	180
48"(DN1200)	470	1390	1335.1	1289	44-Φ31.8	/	65.6	2	F40	45400	1800	82500	847	1020	180
52"(DN1300)	530	1495	1436.7	1391	52-Φ31.8	/	70.4	2	F40	56000	1900	104336	896	1080	180
56"(DN1400)	530	1600	1543	1492	60-Φ31.8	/	73.6	2	F40	70500	2000	121000	941	1175	200
60"(DN1500)	530	1725	1662.1	1600	52-Φ34.9	/	76.7	2	F40	86000	3300	160380	995	1225	200

Triple Offset Butterfly Valve

Double Flange

Edmund
VALVE COMPANY (1965) LTD

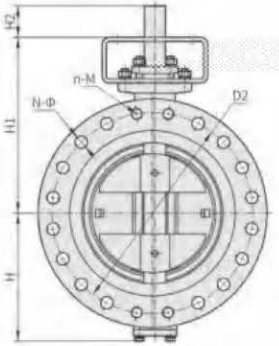

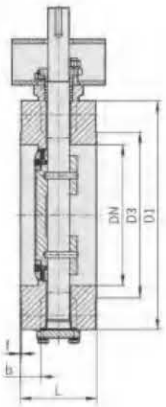

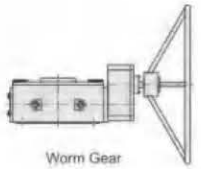

Worm Gear

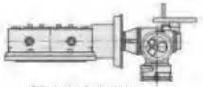

Electric Actuator

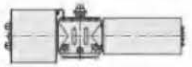

Pneumatic Actuator

Class 300

DN	L	D1	D2	D3	N-Φ	n-M	b	f	ISO5211	Nm	Weight	CV	H	H1	H2
2"(DN50)	108	165	127	92.1	4-Φ19.1	4-5/8-11UNC	22.7	2	F07	78	13	58	82.5	160	40
2.5"(DN65)	112	190	149.2	104.8	4-Φ22.2	4-3/4-10UNC	25.9	2	F07	88	18	109	95	172	40
3"(DN80)	114	210	168.3	127	4-Φ22.2	4-3/4-10UNC	29	2	F07	144	23.2	165	105	207	40
4"(DN100)	127	255	200	157.2	4-Φ22.2	4-3/4-10UNC	32.2	2	F07	258	32	318	127.5	222	45
5"(DN125)	140	280	235	185.7	4-Φ22.2	4-3/4-10UNC	35.4	2	F10	412	42	648	170	272	60
6"(DN150)	140	320	269.9	215.9	8-Φ22.2	4-3/4-10UNC	37	2	F12	798	58	682	190	292	60
8"(DN200)	152	380	330.2	269.9	8-Φ25.4	4-7/8-9UNC	41.7	2	F14	1960	85	1230	230	345	80
10"(DN250)	165	445	387.4	323.8	12-Φ28.6	4-1-8UNC	48.1	2	F16	2270	121.6	2370	260	400	80
12"(DN300)	178	520	450.8	381	12-Φ31.8	4-1 1/8-8UN	51.3	2	F16	2780	180	3520	300	440	85
14"(DN350)	190	585	514.4	412.8	16-Φ31.8	4-1 1/8-8UN	54.4	2	F25	5680	245	4782	330	485	90
16"(DN400)	216	650	571.5	469.9	16-Φ34.9	4-1 1/4-8UN	57.6	2	F25	7800	334	6280	365	510	90
18"(DN450)	222	710	628.6	533.4	20-Φ34.9	4-1 1/4-8UN	60.8	2	F25	8956	400	7980	405	550	120
20"(DN500)	229	775	685.8	584.2	20-Φ34.9	4-1 1/4-8UN	64	2	F30	11518	594	10800	440	600	120
22"(DN550)	267	840	743	641.4	20-Φ41.3	4-1 1/2-8UN	67.1	2	F30	15800	700	13030	480	610	150
24"(DN600)	267	915	812.8	692.2	20-Φ41.3	4-1 1/2-8UN	70.3	2	F30	18393	800	16160	520	675	150
26"(DN650)	292	865	803.3	737	24-Φ34.9	8-1 1/4-8UN	89.4	2	F35	24000	720	19327	575	745	150
28"(DN700)	292	920	857.2	787	28-Φ34.9	8-1 1/4-8UN	89.4	2	F35	27478	920	22410	600	780	180
30"(DN750)	318	990	920.8	845	28-Φ38.1	8-1 3/8-8UN	94.1	2	F35	38971	1100	27090	635	815	180
32"(DN800)	318	1055	977.9	902	24-Φ41.3	8-1 1/2-8UN	103.6	2	F40	41150	1100	33050	665	895	180
34"(DN850)	330	1110	1031.9	953	28-Φ41.3	8-1 1/2-8UN	103.6	2	F40	48200	1600	37320	686	930	180
36"(DN900)	330	1170	1089	1010	24-Φ44.5	8-1 5/8-8UN	103.6	2	F40	53700	1975	42090	712	950	180
38"(DN950)	410	1220	1139.8	1060	28-Φ44.5	8-1 5/8-8UN	111.6	2	F40	63000	2017.6	47000	784	950	200
40"(DN1000)	410	1275	1190.8	1114	32-Φ44.5	8-1 5/8-8UN	116.3	2	F40	68370	2350	48964	784	960	200
44"(DN1100)	470	1385	1295.4	1219	32-Φ47.6	8-1 3/4-8UN	127.5	2	F40	82650	2600	62500	839	1010	200
48"(DN1200)	470	1510	1416	1327	32-Φ50.8	8-1 7/8-8UN	129	2	F48	108000	3200	69350	916	1090	250
52"(DN1300)	530	1615	1517.6	1429	40-Φ50.8	8-1 7/8-8UN	143.3	2	F48	123000	4288	81847	972	1150	250
56"(DN1400)	530	1765	1651	1537	28-Φ60.3	8-2 1/4-8UN	154.4	2	F48	156000	5440	94390	1087	1270	290
60"(DN1500)	530	1880	1763.7	1651	32-Φ60.3	8-2 1/4-8UN	151.3	2	F60	210000	6160	108400	1145	1370	290

Triple Offset Butterfly Valve

Double Flange

Edmund
VALVE COMPANY (1965) LTD

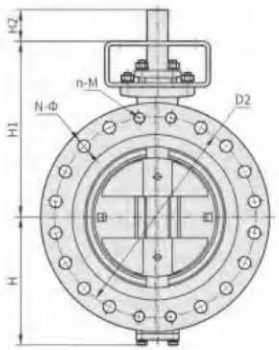

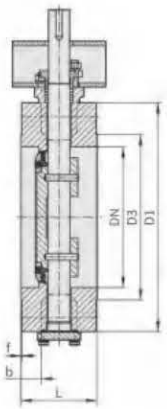

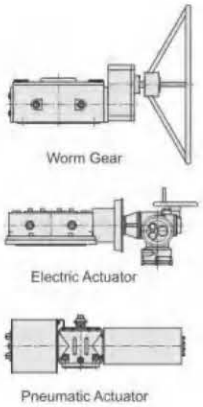

Class 600

DN	L	D1	D2	D3	N-Φ	n-M	b	f	ISO5211	Nm	Weight	CV	H	H1	H2
2"(DN50)	150	165	127	92.1	4-Φ19.1	4-5/8-11UNC	32.4	7	F07	162	15	42	82.5	190	40
2.5"(DN65)	170	190	149.2	104.8	4-Φ22.2	4-3/4-10UNC	35.6	7	F07	208	22	72	95	210	40
3"(DN80)	180	210	168.3	127	4-Φ22.2	4-3/4-10UNC	38.8	7	F10	340	30	107	105	242	40
4"(DN100)	190	275	215.9	157.2	4-Φ25.4	4-7/8-9UNC	45.1	7	F12	633	50	250	137.5	242	60
5"(DN125)	200	330	266.7	185.7	4-Φ28.6	4-1-8UNC	51.5	7	F12	960	88	416	188	282	60
6"(DN150)	210	355	292.1	215.9	8-Φ28.6	4-1-8UNC	54.7	7	F16	1630	118	600	210	345	65
8"(DN200)	230	420	349.2	269.9	8-Φ31.8	4-1 1/8"-8UN	62.6	7	F16	3540	166	1079	245	380	80
10"(DN250)	250	510	431.8	323.8	12-Φ34.9	4-1 1/4-8UN	70.5	7	F25	5462	248	1708	292	440	90
12"(DN300)	270	560	489	381	16-Φ34.9	4-1 1/4-8UN	73.7	7	F25	6018	310	2620	320	465	90
14"(DN350)	290	605	527	412.8	16-Φ38.1	4-1 3/8-8UN	76.9	7	F25	10913	394	4062	350	527	120
16"(DN400)	310	685	603.2	469.9	16-Φ41.3	4-1 1/2-8UN	83.2	7	F30	15757	546	5292	405	570	150
18"(DN450)	330	745	654	533.4	16-Φ44.5	4-1 5/8-8UN	89.6	7	F35	19805	728	7395	440	615	150
20"(DN500)	350	815	723.9	584.2	16-Φ44.5	8-1 5/8-8UN	95.9	7	F35	25808	890	9320	543	670	150
22"(DN550)	370	870	777.7	641.4	16-Φ47.6	8-1 3/4-8UN	102.2	7	F40	40258	1100	12260	560	705	180
24"(DN600)	390	940	838.2	692.2	16-Φ50.8	8-1 7/8-8UN	108.6	7	F40	44799	1280	13578	597	735	180
26"(DN650)	410	890	806.4	727	20-Φ44.5	8-1 5/8-8UN	118.2	7	F40	54490	1300	16490	590	730	180
28"(DN700)	430	950	863.6	784	20-Φ47.6	8-1 3/4-8UN	122.9	7	F40	66593	1440	20326	620	780	180
30"(DN750)	450	1020	927.1	841	20-Φ50.8	8-1 7/8-8UN	132.5	7	F48	79506	1680	23400	675	850	180
32"(DN800)	470	1085	984.2	895	20-Φ54	8-2-8UN	137.2	7	F48	90160	2200	26370	705	890	200
36"(DN900)	510	1215	1104.9	1010	20-Φ60.3	8-2 1/4-8UN	153.1	7	F48	117500	2656	32816	760	970	250

Triple Offset Butterfly Valve

Butt-Welded

Edmund
VALVE COMPANY (1965) LTD

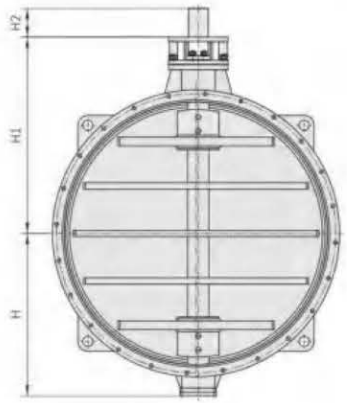

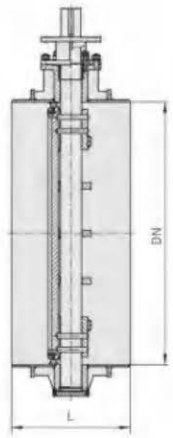

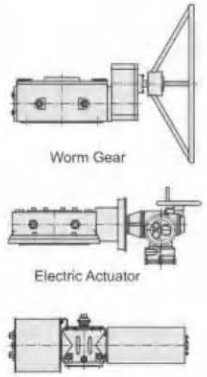

PN 2.5

DN	L	ISO5211	Nm	Weight	CV	H	H1	H2
40"(DN1000)	550	F25	7000	1180	75700	670	815	150
48"(DN1200)	630	F30	15000	1550	110000	760	965	150
56"(DN1400)	710	F30	21000	1965	151000	925	1120	150
64"(DN1600)	790	F35	30000	2750	258000	1020	1240	150
72"(DN1800)	870	F35	38000	3530	343000	1120	1365	180
80"(DN2000)	950	F40	48000	5100	424000	1250	1520	200
88"(DN2200)	1000	F40	61000	5680	542000	1365	1620	200
96"(DN2400)	1100	F48	75000	7180	665000	1425	1775	260
104"(DN2600)	1200	F48	92000	9700	806000	1655	1925	290
112"(DN2800)	1300	F48	100000	10900	950000	1755	2035	290
120"(DN3000)	1400	F48	120000	12680	1080000	1865	2140	290

Triple Offset Butterfly Valve

Butt-Welded

Edmund
VALVE COMPANY (1965) LTD

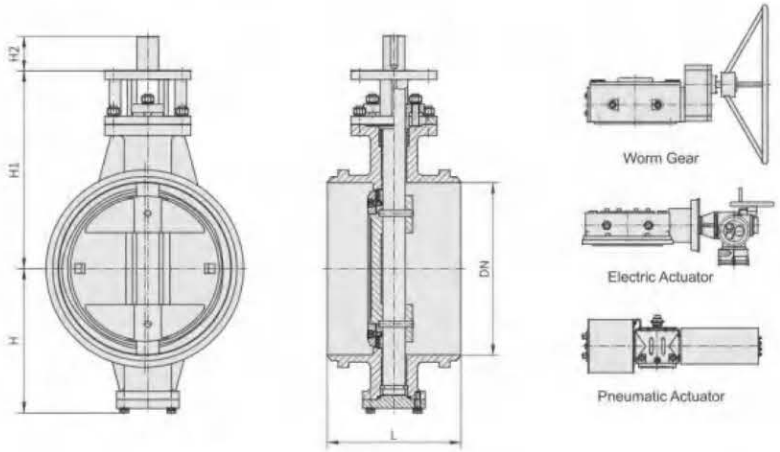

Class 150

DN	L	ISO5211	Nm	Weight	CV	H	H1	H2
6"(DN150)	210	F10	362	41	932	147	270	60
8"(DN200)	230	F12	785	50	1970	205	310	60
10"(DN250)	250	F12	1080	74	2689	230	340	60
12"(DN300)	270	F14	1510	120	3930	276	375	60
14"(DN350)	290	F16	2458	146	5290	304	435	80
16"(DN400)	310	F16	2850	200	7726	322	460	90
18"(DN450)	330	F25	4536	236	9856	358	505	90
20"(DN500)	350	F25	6200	300	12180	388	540	90
24"(DN600)	390	F25	8240	400	19800	453	610	125
26"(DN650)	410	F30	10380	460	23850	476	645	125
28"(DN700)	430	F30	11682	500	27600	513	670	125
30"(DN750)	450	F30	14340	570	33700	581	710	150
32"(DN800)	470	F30	17856	620	35800	626	735	150
36"(DN900)	510	F30	27200	794	45600	639	805	150
40"(DN1000)	550	F35	32000	1250	56000	695	900	150
42"(DN1050)	570	F35	34000	1300	61800	777	952	180
44"(DN1100)	590	F35	36000	1360	67800	810	980	180
48"(DN1200)	630	F40	45400	1800	82500	860	1045	180
52"(DN1300)	670	F40	56000	1900	104336	915	1080	180
56"(DN1400)	710	F40	70500	2000	121000	946	1205	200
60"(DN1500)	750	F40	86000	3300	160380	1040	1225	200

Triple Offset Butterfly Valve

Butt-Welded

Edmund
VALVE COMPANY (1965) LTD

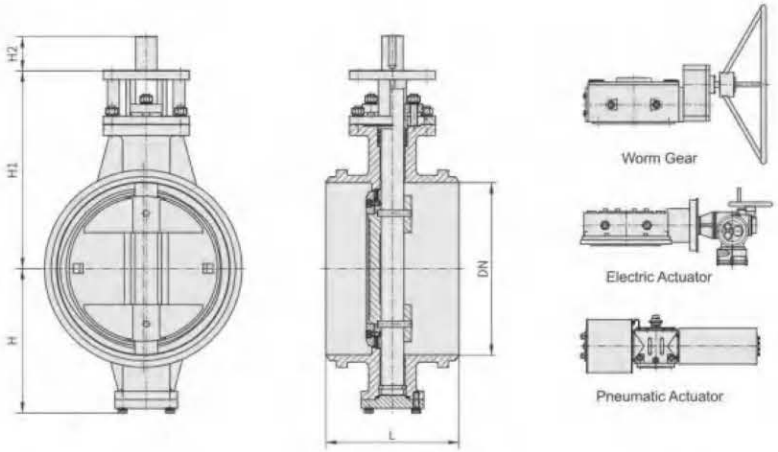

Class 300

DN	L	ISO5211	Nm	Weight	CV	H	H1	H2
6"(DN150)	210	F12	798	50	682	160	270	60
8"(DN200)	230	F14	1960	66	1230	200	325	80
10"(DN250)	250	F16	2270	90	2370	224	366	80
12"(DN300)	270	F16	2780	140	3520	270	413	85
14"(DN350)	290	F25	5680	160	4782	298	480	90
16"(DN400)	310	F25	7800	240	6280	350	510	90
18"(DN450)	330	F25	8956	300	7980	385	540	120
20"(DN500)	350	F30	11518	340	10800	426	580	120
24"(DN600)	390	F30	18393	508	16180	458	650	150

Class 600

DN	L	ISO5211	Nm	Weight	CV	H	H1	H2
6"(DN150)	210	F16	1630	55	600	180	340	65
8"(DN200)	230	F16	3540	74	1079	228	375	80
10"(DN250)	250	F25	5462	100	1708	238	385	90
12"(DN300)	270	F25	6018	150	2620	280	442	90
14"(DN350)	290	F25	10913	190	4062	304	477	120
16"(DN400)	310	F30	15757	300	5292	365	525	150
18"(DN450)	330	F35	19805	380	7395	400	575	150
20"(DN500)	350	F35	25808	490	9320	436	640	150
24"(DN600)	390	F40	44799	800	13578	495	722	180

Triple Offset Butterfly Valve

Cryogenic Side Entry

Edmund
VALVE COMPANY (1965) LTD

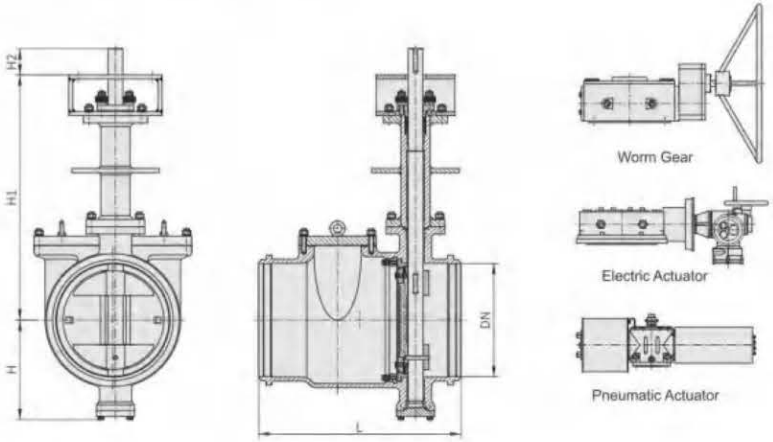

Class 150

DN	L	ISO5211	Nm	Weight	CV	H	H1	H2
8"(DN200)	482	F12	1200	130	1970	209	705	60
10"(DN250)	602	F14	1800	160	2689	239	750	60
12"(DN300)	620	F14	2350	250	3930	264	795	80
14"(DN350)	649	F16	3600	330	5290	304	810	80
16"(DN400)	692	F25	4000	360	7726	340	840	90
18"(DN450)	712	F25	6200	450	9856	395	885	90
20"(DN500)	761	F25	7600	510	12180	401	970	90
24"(DN600)	827	F25	10800	670	19800	463	1065	90
28"(DN700)	881	F30	14000	1120	27600	532	1150	120
30"(DN750)	951	F30	17000	1425	33700	572	1240	150
32"(DN800)	974	F30	23000	1590	35800	620	1280	150
36"(DN900)	980	F30	27000	2015	45600	682	1330	150
40"(DN1000)	1015	F35	34000	2433	56000	752	1495	150
42"(DN1050)	1015	F35	36000	2550	58000	752	1495	150

Triple Offset Butterfly Valve

Cryogenic Side Entry

Edmund
VALVE COMPANY (1965) LTD

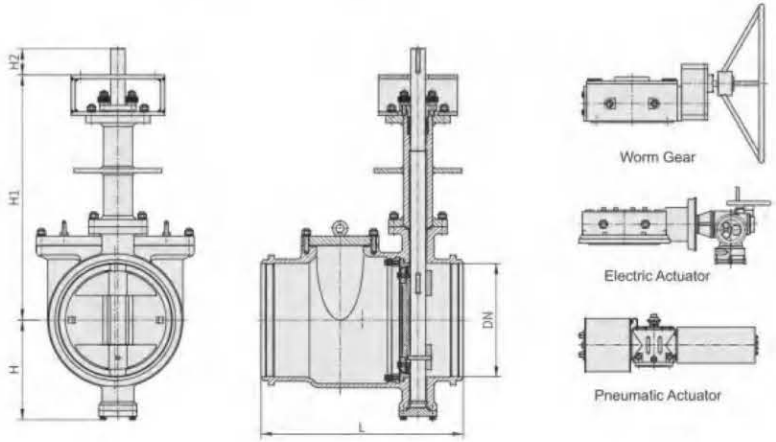

Class 300

DN	L	ISO5211	Nm	Weight	CV	H	H1	H2
8"(DN200)	562	F14	2560	200	1230	205	720	60
10"(DN250)	612	F14	2900	240	2370	245	800	80
12"(DN300)	649	F14	3600	300	3520	280	825	80
14"(DN350)	713	F25	6200	430	4782	315	880	90
16"(DN400)	733	F25	9100	570	6280	362	900	100
18"(DN450)	781	F25	9800	730	7980	403	985	120
20"(DN500)	796	F30	13800	900	10800	440	990	150
24"(DN600)	887	F35	22000	1200	16180	500	1135	150
26"(DN650)	910	F35	28000	1300	19237	554	1350	150
28"(DN700)	941	F35	32000	1700	22410	605	1350	150
30"(DN750)	1001	F40	46000	1900	27090	620	1380	160
32"(DN800)	1020	F40	49000	2250	33050	662	1420	180
36"(DN900)	1104	F40	58000	2875	42090	729	1520	180
40"(DN1000)	1183	F40	72000	4300	48964	797	1575	200
42"(DN1050)	1183	F40	76000	4500	50900	797	1575	200

High Performance Butterfly Valve

Edmund
VALVE COMPANY (1965) LTD

High performance butterfly valve is a new butterfly valve designed on the basis of advantages absorbed from several different structures of butterfly valves. The seal surface of the disk is spherical arc, and the seal structure achieves a real dynamic seal through the system pressure, so it has excellent cut-off performance and durability. Its advantages are small size, light weight, owning a wide range of manufacturing, easy to repair and maintenance.

High Performance Butterfly Valve

High Performance Double Offset Lug Butterfly Valve

High Performance Double Offset Wafer Butterfly Valve

High Performance Double Offset Flange Butterfly Valve

High Performance Double Offset Lug Butterfly Valve

The Design of High Performance Butterfly Valve

Edmund
VALVE COMPANY (1965) LTD

The Design of High Performance Butterfly Valve

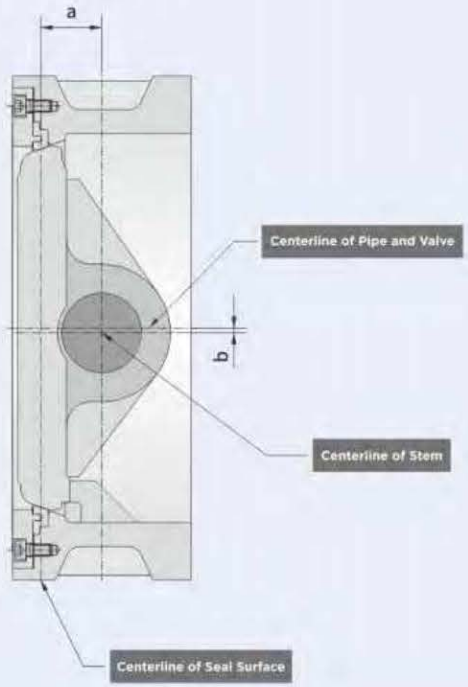

a **The 1st offset a:** The stem deviates from the centerline of the seal surface

b **The 2nd offset b:** The stem deviates from the pipe and the centerline of the valve, both of which are designed to reduce friction between the seat and the seal rings on the disk throughout the route of opening and closing.

The Structure of High Performance Butterfly Valve

Edmund
VALVE COMPANY (1965) LTD

Common Standard

Design Criteria	Flange Standard	Face-to-face Length Standard	Test Standard
GB/T 12238	GB/T 9113	GB/T 12221	GB/T 13927
EN593	EN1092	EN558	EN12266-1
API 609	ASME B 16.5 ASME B 16.47B	API 609 ASME B 16.10	API 598

Production Range

Size Range	Pressure Range	Temperature Range	Connection	Material Range
DN50-DN1800	Within 600LB	-46~200(°C)	Wafer, Lug, Double Falnge	All Metal Material

Seal Structure Type

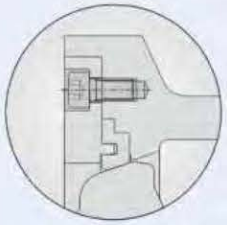

Double Offset PTFE Seal Structure

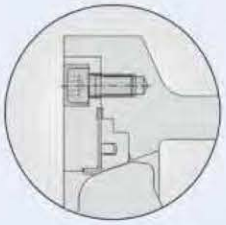

Double Offset PTFE Fire Safe Structure

Characteristics and Advantages of High Performance Butterfly Valve

① The double soft seal design of the high performance butterfly valve gives it zero leakage performance.

② The high performance butterfly valve can get the disk detached from the seat quickly when the valve is opened, greatly eliminating the unnecessary over extrusion and scraping between the disk and the seat, reducing the opening resistance torque as well as the wear, and increasing the seat life.

③ The seat design of the high performance butterfly valve adopts different non metallic materials according to different customers to meet different working conditions. It can also use both soft seal and metal seal to make the valve fire seal by creating a double seal structure.

④ The external blow out proof stem of the high performance butterfly valve is safe and reliable, and conforms

High Performance Butterfly Valve

Wafer

Edmund
VALVE COMPANY (1965) LTD

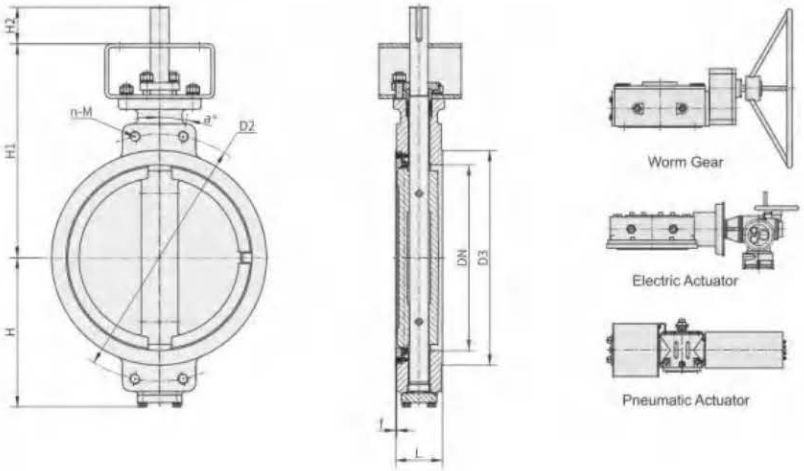

Class 150

DN	L	D2	D3	f	a°	n-M	ISO5211	Nm	Weight	CV	H	H1	H2
2"(DN50)	43	120.7	92.1	/	/	/	F07	24	4	65	64	162	40
2.5"(DN65)	46	139.7	104.8	/	/	/	F07	35	5.5	113	70	172	40
3"(DN80)	48	152.4	127	/	/	/	F07	47	6	172	85	182	40
4"(DN100)	54	190.5	157.2	/	/	/	F07	75	8	385	92	208	40
5"(DN125)	57	215.9	185.7	/	/	/	F07	112	10	658	120	222	40
6"(DN150)	57	241.3	215.9	/	/	/	F10	169	14	1050	150	272	40
8"(DN200)	64	298.5	269.9	/	/	/	F10	325	23	2180	187	307	60
10"(DN250)	71	362	323.8	/	/	/	F12	558	29	3280	215	337	60
12"(DN300)	81	431.8	381	/	/	/	F14	1200	40	5100	224	380	80
14"(DN350)	92	476.3	412.8	/	/	/	F16	1620	70	5800	268	405	80
16"(DN400)	102	539.8	469.9	2	11.25	4-1-8UNC	F16	2130	82	9287	317	455	80
18"(DN450)	114	577.9	533.4	2	11.25	4-1 1/8-8UN	F16	3100	115	11400	347	485	90
20"(DN500)	127	635	584.2	2	9	4-1 1/8-8UN	F16	4000	220	13800	380	510	90
22"(DN550)	154	692.2	641.4	2	9	4-1 1/4-8UN	F25	5200	240	17000	430	575	90
24"(DN600)	154	749.3	692.2	2	9	4-1 1/4-8UN	F25	5800	260	21600	452	605	90

High Performance Butterfly Valve

Wafer

Edmund
VALVE COMPANY (1965) LTD

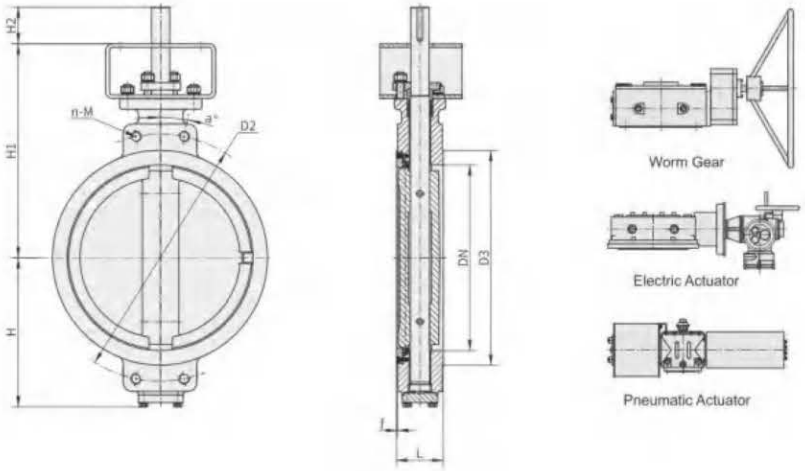

Class 300

DN	L	D2	D3	f	a°	n-M	ISO5211	Nm	Weight	CV	H	H1	H2
2"(DN50)	43	127	92.1	/	/	/	F07	70	5	65	64	162	40
2.5"(DN65)	46	149.2	104.8	/	/	/	F07	95	6	113	70	172	40
3"(DN80)	48	168.3	127	/	/	/	F07	112	7	172	85	182	40
4"(DN100)	54	200	157.2	/	/	/	F07	146	10	385	92	208	40
5"(DN125)	59	235	185.7	2	22.5	4-3/4-10UNC	F07	248	13	658	165	250	60
6"(DN150)	59	269.9	215.9	2	15	4-3/4-10UNC	F10	378	16	1050	172	260	60
8"(DN200)	73	330.2	269.9	2	15	4-7/8-9UNC	F12	852	23	1895	210	320	60
10"(DN250)	83	387.4	323.8	2	11.25	4-1-8UNC	F14	1390	55	3050	247	355	60
12"(DN300)	92	450.8	381	2	11.25	4-1 1/8-8UN	F16	2200	70	4800	286	411	80
14"(DN350)	117	514.4	412.8	2	9	4-1 1/8-8UN	F16	3450	100	5395	321	447	90
16"(DN400)	133	571.5	469.9	2	9	4-1 1/4-8UN	F25	4080	150	7900	362	510	90
18"(DN450)	149	628.6	533.4	2	7.5	4-1 1/4-8UN	F25	5920	220	10086	405	550	110
20"(DN500)	159	685.8	584.2	2	7.5	4-1 1/4-8UN	F25	7900	300	11300	435	590	120
22"(DN550)	181	743	641.4	2	7.5	4-1 1/2-8UN	F25	10500	330	13000	480	610	150
24"(DN600)	181	812.8	692.2	2	7.5	4-1 1/2-8UN	F25	11800	360	16980	505	645	150

High Performance Butterfly Valve

Wafer

Edmund
VALVE COMPANY (1965) LTD

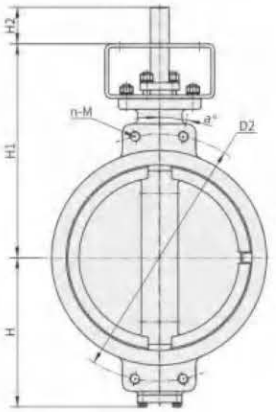

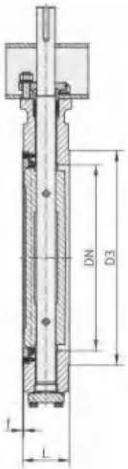

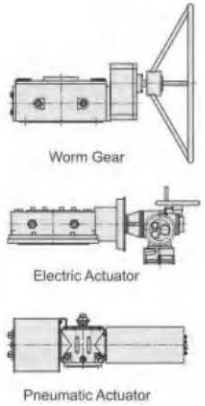

Class 600

DN	L	D2	D3	f	a°	n-M	ISO5211	Nm	Weight	CV	H	H1	H2
2"(DN50)	54	127	92.1	7			F07	125	7	48	64	162	40
2.5"(DN65)	54	149.2	104.8	7	22.5	4-3/4-10UNC	F07	130	11	86	95	210	40
3"(DN80)	54	168.3	127	7	22.5	4-3/4-10UNC	F07	145	14	132	105	227	40
4"(DN100)	64	215.9	157.2	7	22.5	4-7/8-9UNC	F10	189	16	270	120	242	60
5"(DN125)	78	266.7	185.7	7	22.5	4-1-8UNC	F10	630	30	580	188	282	60
6"(DN150)	78	292.1	215.9	7	15	4-1-8UNC	F12	720	50	850	210	345	60
8"(DN200)	102	349.2	269.9	7	15	4-1 1/8-8UN	F16	1500	70	1400	245	380	80
10"(DN250)	117	431.8	323.8	7	11.25	4-1 1/4-8UN	F16	2720	100	2010	287	435	90
12"(DN300)	140	489	381	7	9	4-1 1/4-8UN	F25	4688	150	2980	315	475	90
14"(DN350)	155	527	412.8	7	9	4-1 3/8-8UN	F25	5237	210	3900	357	510	120
16"(DN400)	178	603.2	469.9	7	9	4-1 1/2-8UN	F30	8980	360	5000	406	570	150
18"(DN450)	200	654	533.4	7	9	4-1 5/8-8UN	F30	12090	500	6000	475	633	150
20"(DN500)	216	723.9	584.2	7	7.5	8-1 5/8-8UN	F35	18000	580	8000	543	670	150
22"(DN550)	232	777.8	641.4	7	7.5	8-1 3/4-8UN	F35	20000	630	9500	560	705	180
24"(DN600)	232	838.2	692.2	7	7.5	8-1 7/8-8UN	F35	24100	660	11000	597	735	180

High Performance Butterfly Valve

Lug

Edmund
VALVE COMPANY (1965) LTD

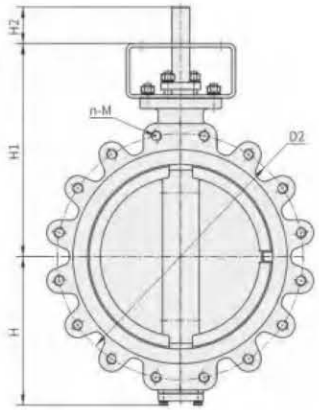

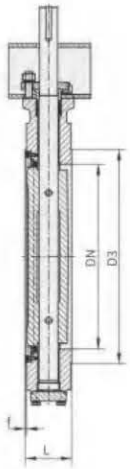

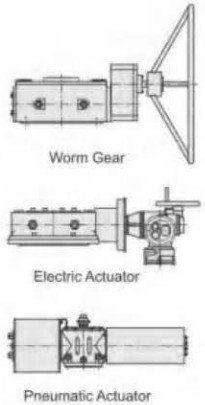

Class 150

DN	L	D2	D3	f	n-M	ISO5211	Nm	Weight	CV	H	H1	H2
2"(DN50)	43	120.7	92.1	2	4-5/8-11UNC	F07	24	5	65	64	162	40
2.5"(DN65)	46	139.7	104.8	2	4-5/8-11UNC	F07	35	6	113	70	172	40
3"(DN80)	48	152.4	127	2	4-5/8-11UNC	F07	47	7	172	85	182	40
4"(DN100)	54	190.5	157.2	2	8-5/8-11UNC	F07	75	10	385	92	208	40
5"(DN125)	57	215.9	185.7	2	8-3/4-10UNC	F07	112	12	658	117	222	40
6"(DN150)	57	241.3	215.9	2	8-3/4-10UNC	F10	169	16	1050	150	272	40
8"(DN200)	64	298.5	269.9	2	8-3/4-10UNC	F10	325	30	2180	187	307	60
10"(DN250)	71	362	323.8	2	12-7/8-9UNC	F12	558	48	3280	215	337	60
12"(DN300)	81	431.8	381	2	12-7/8-9UNC	F14	1200	75	5100	252	380	80
14"(DN350)	92	476.3	412.8	2	12-1-8UNC	F16	1620	90	5800	287	405	80
16"(DN400)	102	539.8	469.9	2	16-1-8UNC	F16	2130	100	9287	317	468	80
18"(DN450)	114	577.9	533.4	2	16-1 1/8-8UN	F16	3100	150	11400	347	485	90
20"(DN500)	127	635	584.2	2	20-1 1/8-8UN	F16	4000	210	13800	380	510	90
22"(DN550)	154	692.2	641.4	2	20-1 1/4-8UN	F25	5200	250	17000	430	575	90
24"(DN600)	154	749.3	692.2	2	20-1 1/4-8UN	F25	5800	300	21600	452	605	90

High Performance Butterfly Valve

Lug

Edmund
VALVE COMPANY (1965) LTD

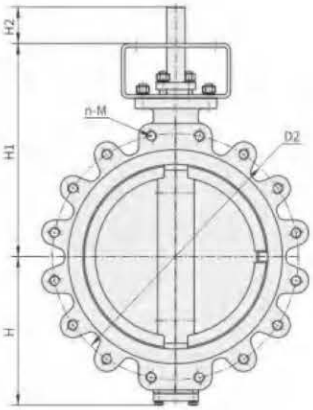

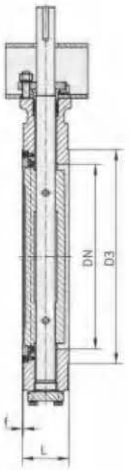

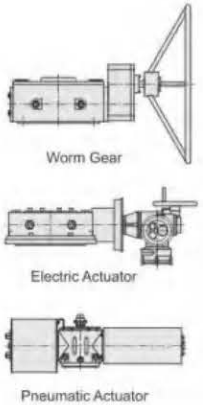

Class 300

DN	L	D2	D3	f	n-M	ISO5211	Nm	Weight	CV	H	H1	H2
2"(DN50)	43	127	92.1	2	8-5/8-11UNC	F07	70	7	65	64	162	40
2.5"(DN65)	46	149.2	104.8	2	8-3/4-10UNC	F07	95	9	113	70	172	40
3"(DN80)	48	168.3	127	2	8-3/4-10UNC	F07	112	13	172	98.5	197	40
4"(DN100)	54	200	157.2	2	8-3/4-10UNC	F07	146	16	385	120	222	40
5"(DN125)	59	235	185.7	2	8-3/4-10UNC	F07	248	23	658	165	250	60
6"(DN150)	59	269.9	215.9	2	12-3/4-10UNC	F10	378	30	1050	178	264	60
8"(DN200)	73	330.2	269.9	2	12-7/8-9UNC	F12	852	38	1895	215	323	60
10"(DN250)	83	387.4	323.8	2	16-1-8UNC	F14	1390	80	3050	252	358	60
12"(DN300)	92	450.8	381	2	16-1 1/8-8UN	F16	2200	110	4800	286	414	80
14"(DN350)	117	514.4	412.8	2	20-1 1/8-8UN	F16	3450	160	5395	324	456	90
16"(DN400)	133	571.5	469.9	2	20-1 1/4-8UN	F25	4080	250	7900	345	510	90
18"(DN450)	149	628.6	533.4	2	24-1 1/4-8UN	F25	5920	350	10086	405	550	110
20"(DN500)	159	685.8	584.2	2	24-1 1/4-8UN	F25	7900	450	11300	435	580	120
22"(DN550)	181	743	641.4	2	24-1 1/2-8UN	F25	10500	530	13000	480	610	150
24"(DN600)	181	812.8	692.2	2	24-1 1/2-8UN	F25	11800	610	16980	505	645	150

High Performance Butterfly Valve

Lug

Edmund
VALVE COMPANY (1965) LTD

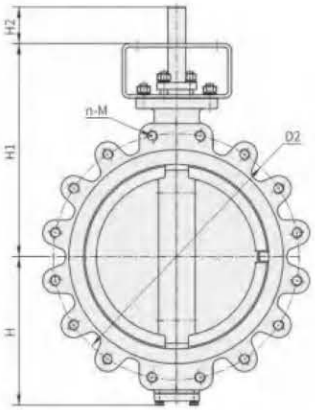

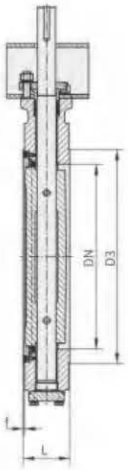

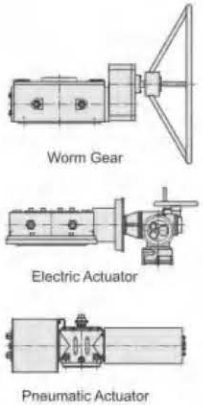

Class 600

DN	L	D2	D3	f	n-M	ISO5211	Nm	Weight	CV	H	H1	H2
2"(DN50)	54	127	92.1	7	8-5/8-11UNC	F07	125	9	48	64	162	40
2.5"(DN65)	54	149.2	104.8	7	8-3/4-10UNC	F07	130	13	86	95	210	40
3"(DN80)	54	168.3	127	7	8-3/4-10UNC	F07	145	17	132	105	227	40
4"(DN100)	64	215.9	157.2	7	8-7/8-9UNC	F10	189	25	270	129	242	60
5"(DN125)	78	266.7	185.7	7	8-1-8UNC	F10	630	43	580	188	282	60
6"(DN150)	78	292.1	215.9	7	12-1-8UNC	F12	720	62	850	210	345	60
8"(DN200)	102	349.2	269.9	7	12-1 1/8-8UN	F16	1500	100	1400	245	380	80
10"(DN250)	117	431.8	323.8	7	16-1 1/4-8UN	F16	2720	140	2010	287	435	90
12"(DN300)	140	489	381	7	20-1 1/4-8UN	F25	4688	210	2980	315	475	90
14"(DN350)	155	527	412.8	7	20-1 3/8-8UN	F25	5237	350	3900	357	510	120
16"(DN400)	178	603.2	469.9	7	20-1 1/2-8UN	F30	8980	530	5000	406	570	150
18"(DN450)	200	654	533.4	7	20-1 5/8-8UN	F30	12090	720	6000	475	633	150
20"(DN500)	216	723.9	584.2	7	24-1 5/8-8UN	F35	18000	890	8000	543	670	150
22"(DN550)	232	777.8	641.4	7	24-1 3/4-8UN	F35	20000	1000	9500	560	705	180
24"(DN600)	232	838.2	692.2	7	24-1 7/8-8UN	F35	24100	1280	11000	597	735	180

Double Offset Rubber Seal Butterfly Valve

When the double offset rubber sealed butterfly valve is opened, the disk can be quickly detached from the seat, greatly eliminating the unnecessary over-extrusion and scraping between the disk and the seat, reducing the opening resistance torque as well as the wear, and increasing the seat life. They are widely used on industrial pipelines, such as metallurgy, electric power, petrochemical, water supply/drainage and municipal construction for regulating flow and shutting off fluids.

Double Offset Flange Butterfly Valve

Vacuum Double Offset
Double Flange Butterfly Valve

Double Offset Flange Butterfly Valve

Double Offset Flange Butterfly Valve

Vacuum Double Offset Butted-Welded Butterfly Valve

The Design of Double Offset Rubber Seal Butterfly Valve

Edmund
VALVE COMPANY (1965) LTD

The Design of Double Offset Rubber Sealed Butterfly Valve

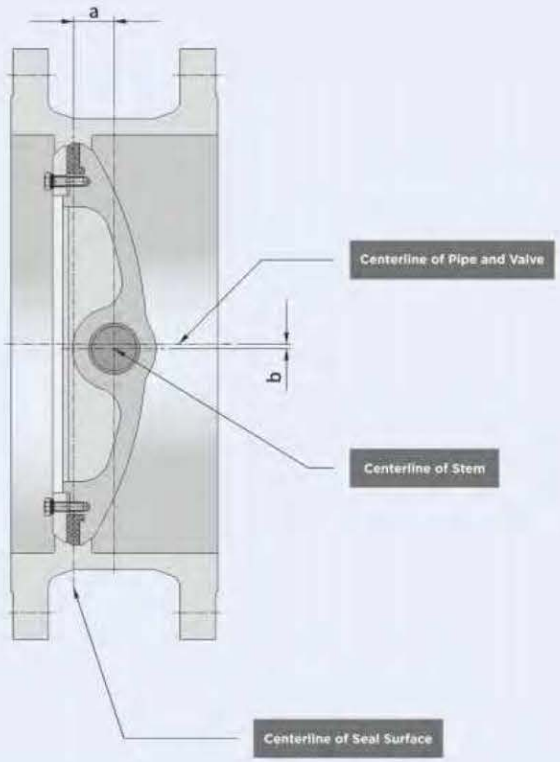

a **The 1st offset a:** The stem deviates from the centerline of the seal surface

b **The 2nd offset b:** The stem deviates from the pipe and the centerline of the valve, both of which are designed to reduce friction between the seat and the seal rings on the disk throughout the route of opening and closing.

The Structure of Double Offset Rubber Seal

Edmund
VALVE COMPANY (1965) LTD

Common Standard

Design Criteria	Flange Standard	Face-to-face Length Standard	Test Standard
GB/T 12238	GB/T 9113	GB/T 12221	GB/T 13927
EN593	EN1092	EN558	EN12266-1
API 609	ASME B 16.5 ASME B 16.47B	API 609 ASME B 16.10	API 598

Production Range

Size Range	Pressure Range	Temperature Range	Connection	Material Range
DN50-DN3000	Within 150LB	-29~120(°C)	Double Falnge,Butt-Welded	All Metal Material

Seal Structure Type

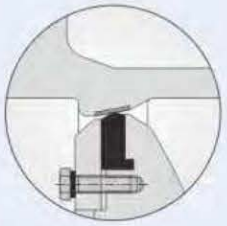

The Structure of Double Offset Rubber Seal

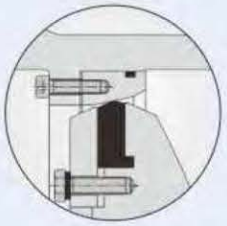

The Structure of Double Offset Rubber Seal (Replaceable Seat)

Characteristics and Advantages of Double Offset Rubber Sealed Butterfly Valve

① The soft seal design of the double offset rubber sealed butterfly valve gives it zero leakage performance.

② The double offset rubber sealed butterfly valve can get the disk detached from the seat quickly when the valve is opened, greatly eliminating the unnecessary over-extrusion and scraping between the disk and the seat, reducing the opening resistance torque as well as the wear, and increasing the seat life.

③ The seat design of the double offset rubber sealed butterfly valve adopts different non-metallic materials according to different customers to meet different working conditions.

④ The external blow-out proof stem of the double offset rubber sealed butterfly valve is safe and reliable.

Double Offset Rubber Seal Butterfly Valve

Double Flange

Edmund
VALVE COMPANY (1965) LTD

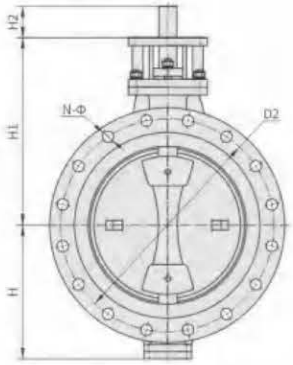

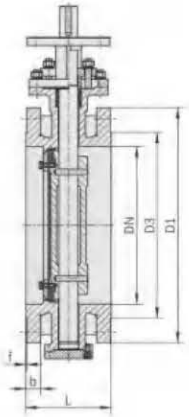

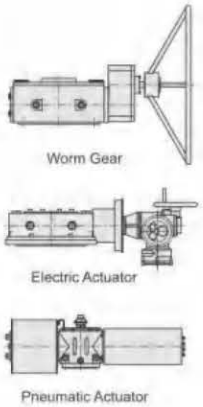

PN 6

DN	L	D1	D2	D3	N-Φ	b	f	ISO5211	Nm	Weight	CV	H	H1	H2
2"(DN50)	108	140	110	88	4-Φ14	16	3	F07	10	9	97	70	176	40
2.5"(DN65)	112	160	130	108	4-Φ14	16	3	F07	15	10	165	80	189	40
3"(DN80)	114	190	150	124	4-Φ18	18	3	F07	28	11	250	95	199	50
4"(DN100)	127	210	170	144	4-Φ18	18	3	F07	30	14	489	105	204	50
5"(DN125)	140	240	200	174	8-Φ18	20	3	F07	45	19	956	120	224	45
6"(DN150)	140	265	225	199	8-Φ18	20	3	F07	85	21	1147	132.5	247	40
8"(DN200)	152	320	280	254	8-Φ18	22	3	F10	170	41	2040	160	300	60
10"(DN250)	165	375	335	309	12-Φ18	24	3	F12	400	60	3188	187.5	340	60
12"(DN300)	178	440	395	363	12-Φ22	24	4	F12	650	75	4591	220	373.5	60
14"(DN350)	190	490	445	413	12-Φ22	24	4	F14	760	95	7187	245	395	80
16"(DN400)	216	540	495	463	16-Φ22	24	4	F16	980	140	9380	270	467	90
18"(DN450)	222	595	550	518	16-Φ22	24	4	F16	1170	180	11800	307.5	480	90
20"(DN500)	229	645	600	568	20-Φ22	26	4	F16	1500	190	14668	362	525	90
24"(DN600)	267	755	705	667	20-Φ26	26	5	F16	2800	270	21120	392	605	90
28"(DN700)	292	860	810	772	24-Φ26	26	5	F25	3850	350	28750	464	670	90
32"(DN800)	318	975	920	878	24-Φ30	26	5	F25	5800	460	37600	529	717	105
36"(DN900)	330	1075	1020	978	24-Φ30	26	5	F25	7800	640	47500	585	765	120
40"(DN1000)	410	1175	1120	1078	28-Φ30	28	5	F25	9300	750	65000	645	825	125
48"(DN1200)	470	1405	1340	1295	32-Φ33	28	5	F30	16000	1480	94000	748	996	150
56"(DN1400)	530	1630	1560	1510	36-Φ36	32	5	F35	27000	1900	188000	900	1118	150
64"(DN1600)	600	1830	1760	1710	40-Φ36	34	5	F35	33800	2900	271000	1025	1285	200
72"(DN1800)	670	2045	1970	1918	44-Φ39	36	5	F40	46200	4400	340000	1118	1385	200
80"(DN2000)	540	2265	2180	2125	48-Φ42	38	5	F48	65000	5400	445000	1300	1555	250

Double Offset Rubber Seal Butterfly Valve

Double Flange

Edmund
VALVE COMPANY (1965) LTD

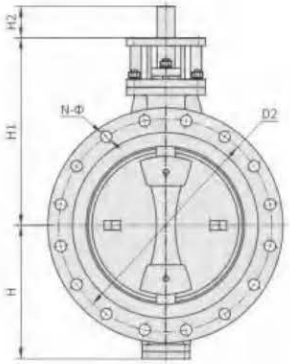

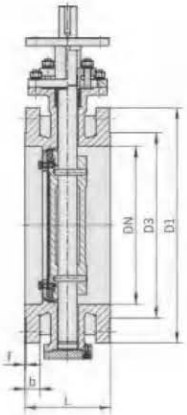

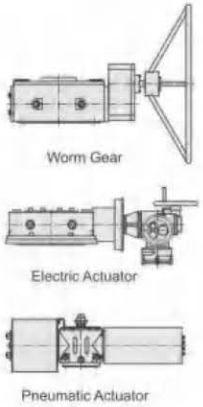

PN 10

DN	L	D1	D2	D3	N-Φ	b	f	ISO5211	Nm	Weight	CV	H	H1	H2
2"(DN50)	108	165	125	99	4-Φ18	20	3	F07	15	9	97	82.5	176	40
2.5"(DN65)	112	185	145	118	4-Φ18	20	3	F07	15	10	165	92.5	189	40
3"(DN80)	114	200	160	132	8-Φ18	20	3	F07	30	11	250	100	199	50
4"(DN100)	127	220	180	156	8-Φ18	22	3	F07	38	14	489	110	204	50
5"(DN125)	140	250	210	184	8-Φ18	22	3	F07	68	19	956	120	224	45
6"(DN150)	140	285	240	211	8-Φ22	24	3	F07	105	21	1147	142.5	247	40
8"(DN200)	152	340	295	266	8-Φ22	24	3	F10	220	41	2040	170	300	60
10"(DN250)	165	395	350	319	12-Φ22	26	3	F12	460	60	3188	197.5	340	60
12"(DN300)	178	445	400	370	12-Φ22	26	4	F12	800	75	4591	222.5	373.5	60
14"(DN350)	190	505	460	429	16-Φ22	26	4	F14	936	95	7187	272.5	395	80
16"(DN400)	216	565	515	480	16-Φ26	26	4	F16	1150	140	9380	300	467	90
18"(DN450)	222	615	565	530	20-Φ26	28	4	F16	1560	180	11800	307.5	480	90
20"(DN500)	229	670	620	582	20-Φ26	28	4	F16	2466	190	14668	362	525	90
24"(DN600)	267	780	725	682	20-Φ30	30	5	F25	3600	270	21120	392	605	90
28"(DN700)	292	895	840	794	24-Φ30	30	5	F25	5400	350	28750	464	670	90
32"(DN800)	318	1015	950	901	24-Φ33	32	5	F25	8160	460	37600	529	717	105
36"(DN900)	330	1115	1050	1001	28-Φ33	34	5	F25	9600	640	47500	565	765	120
40"(DN1000)	410	1230	1160	1112	28-Φ36	34	5	F25	12000	750	65000	645	825	125
48"(DN1200)	470	1455	1380	1328	32-Φ39	38	5	F35	23000	1480	94000	748	996	150
56"(DN1400)	530	1675	1590	1530	36-Φ42	42	5	F35	35000	1900	188000	900	1118	150
64"(DN1600)	600	1915	1820	1750	40-Φ48	46	5	F40	47500	2900	246000	1025	1285	200
72"(DN1800)	670	2115	2020	1950	44-Φ48	50	5	F40	65000	4400	312000	1118	1385	200
80"(DN2000)	540	2325	2230	2150	48-Φ48	54	5	F48	80000	5400	413000	1300	1555	250

Double Offset Rubber Seal Butterfly Valve

Butt-Welded

Edmund
VALVE COMPANY (1965) LTD

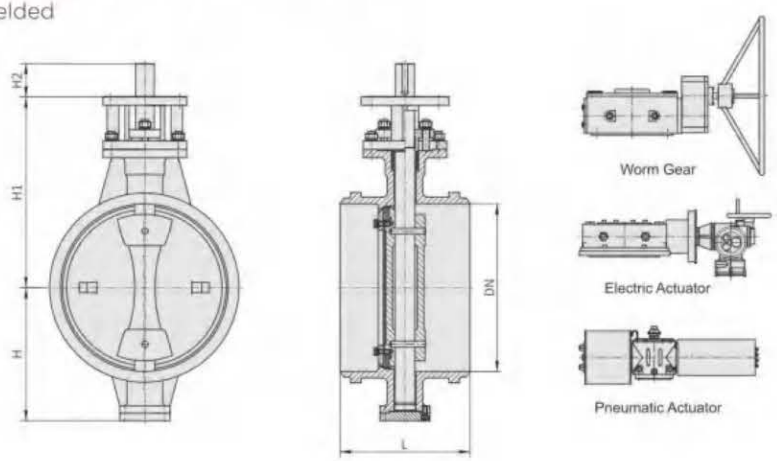

PN 6

DN	L	ISO5211	Nm	Weight	CV	H	H1	H2
6"(DN150)	210	F07	85	21	1147	132. 5	247	60
8"(DN200)	230	F10	170	41	2040	160	300	60
10"(DN250)	250	F12	400	60	3188	187. 5	340	60
12"(DN300)	270	F12	650	75	4591	220	373. 5	60
14"(DN350)	290	F14	760	95	7187	245	395	80
16"(DN400)	310	F16	980	140	9380	270	467	90
18"(DN450)	330	F16	1170	180	11800	307. 5	480	90
20"(DN500)	350	F16	1500	190	14668	362	525	95
24"(DN600)	390	F16	2800	270	21120	392	605	90
28"(DN700)	430	F25	3850	350	28750	464	670	90
32"(DN800)	470	F25	5800	460	37600	529	717	105
36"(DN900)	510	F25	7800	640	47500	565	765	120
40"(DN1000)	550	F25	9300	750	65000	645	825	125
48"(DN1200)	630	F30	16000	1480	94000	748	996	150
56"(DN1400)	710	F35	27000	1900	188000	900	1118	150
64"(DN1600)	790	F35	33800	2900	271000	1025	1285	200
72"(DN1800)	870	F40	46200	4400	340000	1118	1385	200
80"(DN2000)	950	F48	65000	6200	445000	1300	1555	250

Double Offset Rubber Seal Butterfly Valve

Butt-Welded

Edmund
VALVE COMPANY (1965) LTD

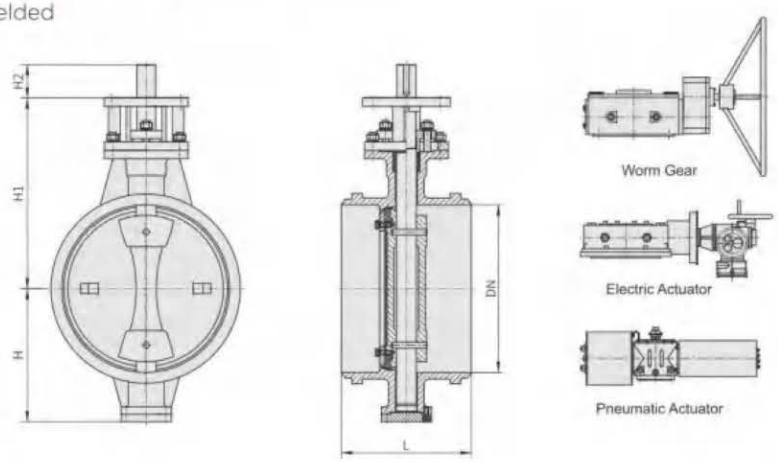

PN 10

DN	L	ISO5211	Nm	Weight	CV	H	H1	H2
6"(DN150)	210	F07	105	21	1147	142.5	247	60
8"(DN200)	230	F10	220	41	2040	170	300	60
10"(DN250)	250	F12	460	60	3188	198	340	60
12"(DN300)	270	F12	800	75	4591	222.5	373.5	60
14"(DN350)	290	F14	936	95	7187	272.5	395	80
16"(DN400)	310	F16	1150	140	9380	300	467	90
18"(DN450)	330	F16	1560	180	11800	307.5	480	90
20"(DN500)	350	F16	2466	190	14668	362	525	95
24"(DN600)	390	F25	3600	270	21120	392	605	90
28"(DN700)	430	F25	5400	350	28750	464	670	90
32"(DN800)	470	F25	8160	460	37600	529	717	105
36"(DN900)	510	F25	9600	640	47500	565	765	120
40"(DN1000)	550	F25	12000	750	65000	645	825	125
48"(DN1200)	630	F35	23000	1480	94000	748	996	150
56"(DN1400)	710	F35	35000	1900	188000	900	1118	150
64"(DN1600)	790	F40	47500	2900	246000	1025	1285	200
72"(DN1800)	870	F40	65000	4400	312000	1118	1385	200
80"(DN2000)	950	F48	80000	6200	413000	1300	1555	250

Concentric Butterfly Valve

Edmund
VALVE COMPANY (1965) LTD

The concentric rubber lined butterfly valve is widely used on industrial pipelines, such as metallurgy, electric power, petrochemical, water supply/drainage and municipal construction for regulating flow and shutting off fluids.

Concentric Lug Butterfly Valve

Concentric Flange Butterfly Valve

Concentric Flange Butterfly Valve

Concentric Wafer Butterfly Valve

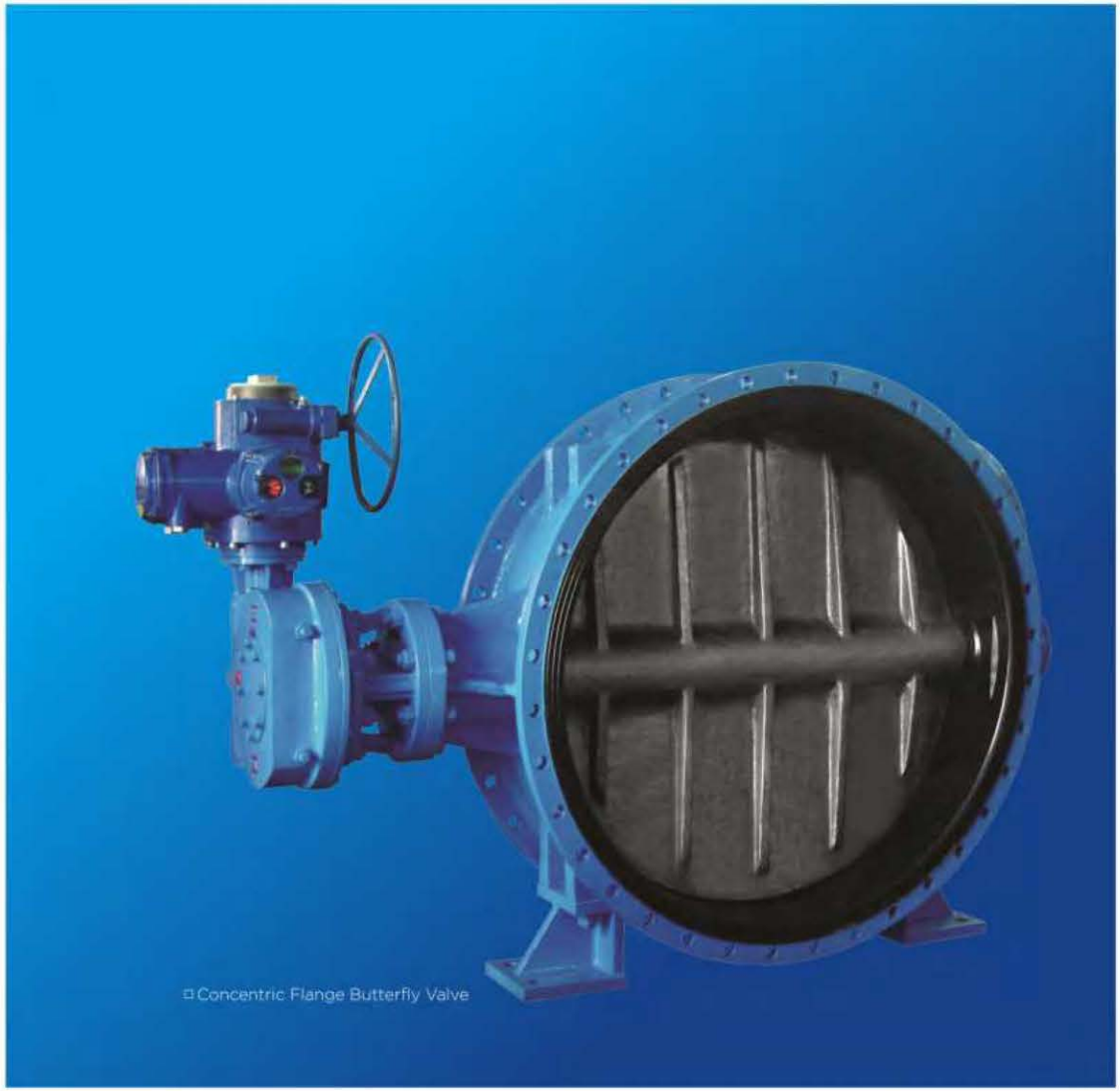

Concentric Flange Butterfly Valve

The Design of Concentric Rubber Seat Butterfly Valve

Edmund
VALVE COMPANY (1965) LTD

The Design of Concentric Rubber Seal

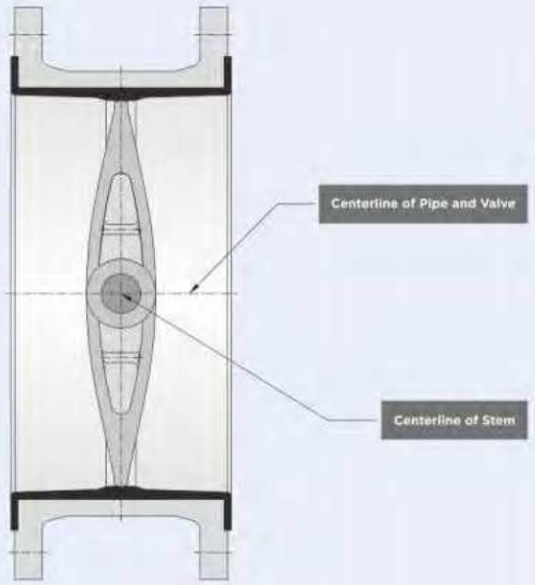

a

The disk sealing center of the butterfly valve coincides with the gyration center of the stem. The valve creates a specific seal pressure between the seat and the seal surface of the disk a by certain amount of interference, so as to ensure the sealing effect of the seal pair.

The Structure of Concentric Rubber Seat Butterfly Valve

Edmund
VALVE COMPANY (1965) LTD

Common Standard

Design Criteria	Flange Standard	Face-to-face Length Standard	Test Standard
GB/T 12238	GB/T 9113	GB/T 12221	GB/T 13927
EN593	EN1092	EN558	EN12266-1
API 609	ASME B 16.5 ASME B 16.47B	API 609 ASME B 16.10	API 598

Production Range

Size Range	Pressure Range	Temperature Range	Connection	Material Range
DN50-DN1800	Within 150LB	-29~120(°C)	Wafer, Lug, Double Flange	All Metal Material

Seal Structure Type

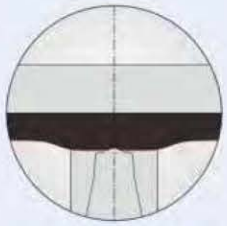

Concentric Rubber Seat Structure

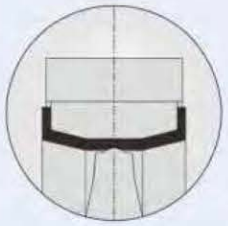

Concentric Rubber Seat Structure

The Characteristics of Concentric Rubber Sealed Butterfly Valve

① The elastic seal design of the concentric butterfly valve gives it bi-directional zero leakage performance.

② The valve body adopts a precision casting process, rubber lining avoiding contact with the fluid medium, and a combination of different rubber materials meets various working conditions.

③ The streamline design of the butterfly disk + polishing edge give lower operating torque and minimum pressure loss, ensuring a longer-termed zero-leakage seal and seat life.

④ The flexible design of full axis/half axis, pin/no pin meets the needs of different customers.

⑤ The valve seat design uses backlining and vulcanization structure according to different specifications to isolate the valve body and stem from the fluid, and provides a seal to the pipe flanges without additional

Concentric Rubber Seat Butterfly Valve

Wafer

Edmund
VALVE COMPANY (1965) LTD

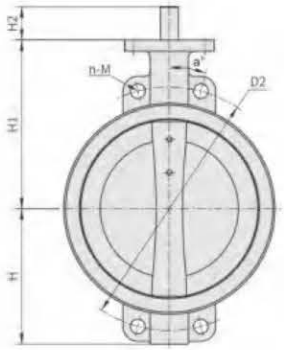

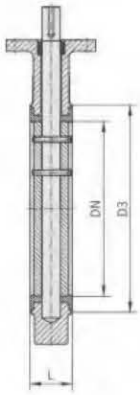

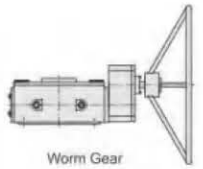

Worm Gear

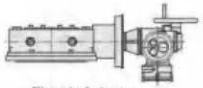

Electric Actuator

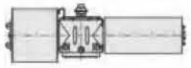

Pneumatic Actuator

PN 16

DN	L	D2	D3	a°	n-M	ISO5211	Nm	Weight	CV	H	H1	H2
2"(DN50)	43	125	76	45	4-Φ18	F07	10	2.5	130	82	133	40
2.5"(DN65)	46	145	89	45	4-Φ18	F07	18	3	230	88	144	40
3"(DN80)	46	160	104	22.5	4-Φ18	F07	25	3.5	340	97	148	40
4"(DN100)	52	180	135	22.5	4-Φ18	F07	30	5	648	114	168	40
5"(DN125)	56	210	159	22.5	4-Φ18	F07	80	7	1250	127	182	40
6"(DN150)	56	240	188	22.5	4-Φ22	F07	110	8	1830	140	205	45
8"(DN200)	60	295	238	15	4-Φ22	F10	190	13	3400	174	244	45
10"(DN250)	68	355	295	15	4-Φ26	F10	360	21	5270	200	232	60
12"(DN300)	78	410	350	15	4-Φ26	F12	760	33	7590	224	260	60
14"(DN350)	78	470	395	11.25	4-Φ26	F12	820	42	10332	257	293	80
16"(DN400)	102	525	450	11.25	4-Φ30	F14	1180	63	13727	290	330	80
18"(DN450)	114	585	504	9	4-Φ30	F16	1320	81	17372	325	510	95
20"(DN500)	127	650	554	9	4-Φ33	F16	2077	130	20105	360	565	95
24"(DN600)	154	770	654	9	4-Φ36	F16	4200	192	28952	428	595	95
28"(DN700)	165	840	753	7.5	4-Φ36	F25	4800		42038	470	680	100
32"(DN800)	190	950	856	7.5	4-Φ39	F25	8000		54900	530	735	125
36"(DN900)	203	1050	970	6.428	4-Φ39	F25	11000		69490	590	815	125
40"(DN1000)	216	1170	1065	6.428	4-Φ42	F30	13800		80420	655	885	125
48"(DN1200)	254	1390	1280	5.625	4-M45	F30	18920		123600	745	950	150

Concentric Rubber Seat Butterfly Valve

Wafer

Edmund
VALVE COMPANY (1965) LTD

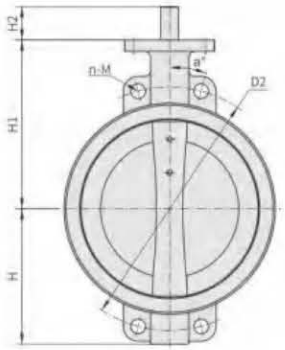

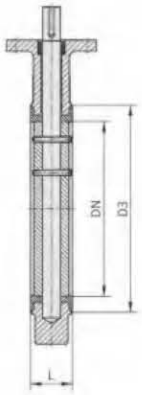

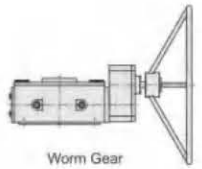

Worm Gear

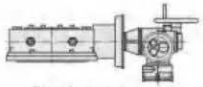

Electric Actuator

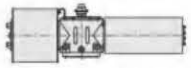

Pneumatic Actuator

Class 150

DN	L	D2	D3	a°	n-M	ISO5211	Nm	Weight	CV	H	H1	H2
2"(DN50)	43	120.7	76	45	4-Φ19.1	F07	10	2.5	130	82	133	40
2.5"(DN65)	46	139.7	89	45	4-Φ19.1	F07	18	3	230	88	144	40
3"(DN80)	46	152.4	104	45	4-Φ19.1	F07	25	3.5	340	97	148	40
4"(DN100)	52	190.5	135	22.5	4-Φ19.1	F07	30	5	648	114	168	40
5"(DN125)	56	215.9	159	22.5	4-Φ22.2	F07	80	7	1250	127	182	40
6"(DN150)	56	241.3	188	22.5	4-Φ22.2	F07	110	8	1830	140	205	45
8"(DN200)	60	298.5	238	22.5	4-Φ22.2	F10	190	16	3400	174	244	45
10"(DN250)	68	362	295	15	4-Φ25.4	F10	360	27	5270	200	232	60
12"(DN300)	78	431.8	350	15	4-Φ25.4	F12	760	39	7590	224	290	60
14"(DN350)	78	476.3	395	15	4-Φ28.6	F14	820	54	10332	265	330	80
16"(DN400)	102	539.8	450	11.25	4-Φ28.6	F14	1180	77	13727	314	360	80
18"(DN450)	114	577.9	504	11.25	4-1 1/8-8UN	F16	1320	96	17372	342	507	95
20"(DN500)	127	635	554	9	4-Φ31.8	F16	2077	147	20105	376	440	95
24"(DN600)	154	749.3	654	9	4-1 1/4-8UN	F16	4200	223	28952	439	605	95
28"(DN700)	165	795.3	753	4.5	4-3/4-10UNC	F25	4800		42038	470	680	100
32"(DN800)	190	900.1	864	3.75	4-3/4-10UNC	F25	8000		54900	530	735	125
36"(DN900)	203	1009.6	972	4.09	4-7/8-9UNC	F25	11000		69490	590	815	125
40"(DN1000)	216	1120.8	1080	4.09	4-1-8UNC	F30	13800		80420	655	885	125
48"(DN1200)	254	1335.1	1289	4.09	4-1 1/8-8UN	F30	18920		123600	745	950	150

Concentric Rubber Seat Butterfly Valve

Lug

Edmund
VALVE COMPANY (1965) LTD

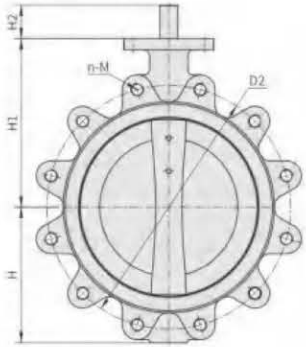

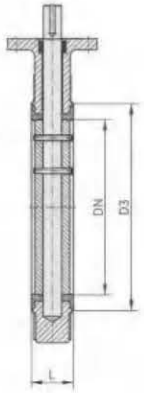

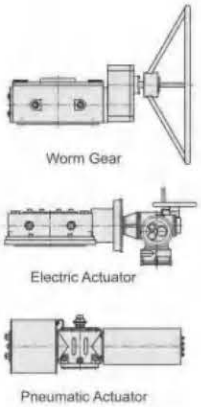

Class 150

DN	L	D2	D3	n-M	ISO5211	Nm	Weight	CV	H	H1	H2
2"(DN50)	43	120.7	76	4-5/8-11UNC	F07	10	4	130	68	110	40
2.5"(DN65)	46	139.7	89	4-5/8-11UNC	F07	18	4.5	230	88	167	40
3"(DN80)	46	152.4	104	4-5/8-11UNC	F07	25	5	340	100	156	40
4"(DN100)	52	190.5	135	8-5/8-11UNC	F07	30	9	648	114	168	40
5"(DN125)	56	215.9	159	8-3/4-10UNC	F07	80	11	1250	127	182	40
6"(DN150)	56	241.3	188	8-3/4-10UNC	F07	110	16	1830	140	205	45
8"(DN200)	60	298.5	238	8-3/4-10UNC	F10	190	23	3400	165	245	45
10"(DN250)	68	362	295	12-7/8-9UNC	F10	360	38	5270	200	232	60
12"(DN300)	78	431.8	350	12-7/8-9UNC	F12	760	47	7590	240	290	60
14"(DN350)	78	476.3	395	12-1-8UNC	F14	820	69	10332	265	330	80
16"(DN400)	102	539.8	450	16-1-8UNC	F14	1180	112	13727	317	360	80
18"(DN450)	114	577.9	533.4	16-1 1/8-8UN	F16	1320	139	17372	342	507	95
20"(DN500)	127	635	584.2	20-1 1/8-8UN	F16	2077	221	20105	372	575	95
24"(DN600)	154	749.3	692.2	20-1 1/4-8UN	F16	4200	305	28952	439	605	95
28"(DN700)	165	795.3	753	40-3/4-10UNC	F25	4800		42038	470	680	100
32"(DN800)	190	900.1	864	48-3/4-10UNC	F25	8000		54900	530	735	125
36"(DN900)	203	1009.6	972	44-7/8-9UNC	F25	11000		69490	590	815	125
40"(DN1000)	216	1120.8	1080	44-1-8UNC	F30	13800		80420	655	885	125
48"(DN1200)	254	1335.1	1289	44-1 1/8-8UN	F30	18920		123600	745	950	150

Concentric Rubber Seat Butterfly Valve

Double Flange

Edmund
VALVE COMPANY (1965) LTD

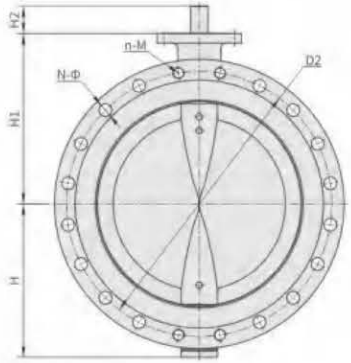

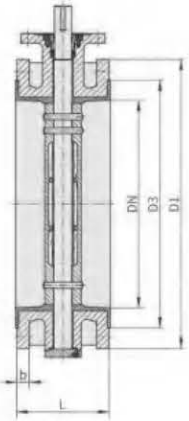

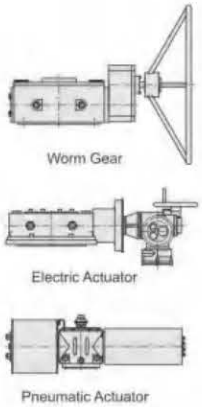

PN 16

DN	L	D1	D2	D3	N-Φ	n-M	b	ISO5211	Nm	Weight	CV	H	H1	H2
2"(DN50)	108	165	125	88	4-Φ18	/	20	F07	10	8	130	82.5	120	40
2.5"(DN65)	112	185	145	105	4-Φ18	/	20	F07	18	10	230	92.5	127.5	40
3"(DN80)	114	200	160	127	8-Φ18	/	20	F07	25	11	340	100	135	40
4"(DN100)	127	220	180	155	8-Φ18	/	20	F07	30	14	648	110	162	40
5"(DN125)	140	250	210	184	8-Φ18	/	22	F07	80	18	1250	125	190	40
6"(DN150)	140	285	240	211	8-Φ22		22	F10	110	22	1830	142.5	200	45
8"(DN200)	152	340	295	266	8-Φ22	4-M20	24	F12	190	35	3400	170	230	45
10"(DN250)	165	405	355	324	8-Φ26	4-M24	26	F12	360	51	5270	202.5	255	60
12"(DN300)	178	460	410	370	8-Φ26	4-M24	28	F12	760	67	7590	230	290	60
14"(DN350)	190	520	470	429	12-Φ26	4-M24	30	F16	820	107	10332	260	330	80
16"(DN400)	216	580	525	480	12-Φ30	4-M27	32	F16	1180	139	13727	300	360	80
18"(DN450)	222	640	585	540	16-Φ30	4-M27	34	F16	1320	190	17372	345	385	95
20"(DN500)	229	715	650	609	20-Φ33	/	36	F25	2077	232	20105	380	430	95
24"(DN600)	267	840	770	720	20-Φ36	/	38	F25	4200	350	28952	445	495	95
28"(DN700)	292	910	840	794	24-Φ36	/	40	F25	4800		42038	490	540	100
32"(DN800)	318	1025	950	905	24-Φ39	/	42	F25	8000		54900	541	590	125
36"(DN900)	330	1125	1050	1001	28-Φ39	/	44	F25	11000		69490	617	670	125
40"(DN1000)	410	1255	1170	1112	28-Φ42	/	46	F30	13800		80420	677	735	125
48"(DN1200)	470	1485	1390	1328	32-Φ48	/	52	F30	18920		123600	790	845	150

Concentric Rubber Seat Butterfly Valve

Double Flange

Edmund
VALVE COMPANY (1965) LTD

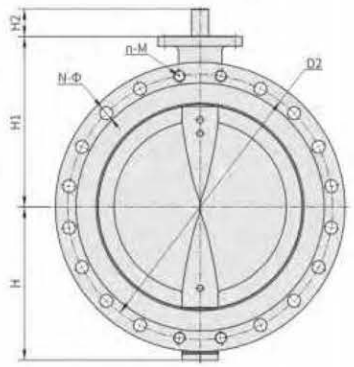

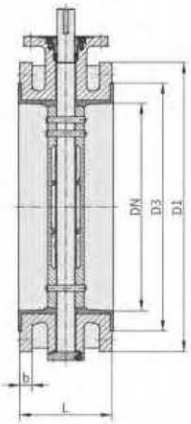

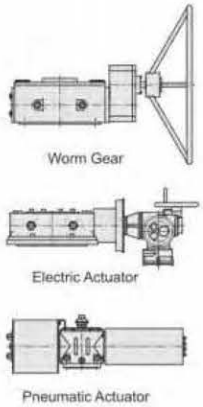

Class 150

DN	L	D1	D2	D3	N-Φ	n-M	b	ISO5211	Nm	Weight	CV	H	H1	H2
2"(DN50)	108	150	120.7	88	4-Φ19.1	/	19.5	F07	10	7.5	130	75	120	40
2.5"(DN65)	112	180	139.7	105	4-Φ19.1	/	22.7	F07	18	10	230	90	127.5	40
3"(DN80)	114	190	152.4	127	4-Φ19.1	/	24.3	F07	25	11	340	95	135	40
4"(DN100)	127	230	190.5	155	8-Φ19.1	2-5/8-11UNC	24.3	F07	30	14	648	115	162	40
5"(DN125)	140	255	215.9	184	8-Φ22.2	/	24.3	F07	80	18	1250	127.5	190	40
6"(DN150)	140	280	241.3	211	8-Φ22.2	/	25.9	F10	110	22	1830	140	200	45
8"(DN200)	152	345	298.5	266	8-Φ22.2	/	29	F12	190	35	3400	172.5	230	45
10"(DN250)	165	405	362	323.8	8-Φ25.4	4-7/8-9UNC	30.6	F12	360	51	5270	202.5	255	60
12"(DN300)	178	485	431.8	381	8-Φ25.4	4-7/8-9UNC	32.2	F12	760	80	7590	243.5	290	60
14"(DN350)	190	535	476.3	429	8-Φ28.6	4-1-8UNC	35.4	F16	820	129	10332	267.5	330	80
16"(DN400)	216	595	539.8	469.9	12-Φ28.6	4-1-8UNC	37	F16	1180	167	13727	300	360	80
18"(DN450)	222	635	577.9	533.4	12-Φ31.8	4-1 1/8-8UN	40.1	F16	1320	228	17372	345	385	95
20"(DN500)	229	700	635	584.2	16-Φ31.8	4-1 1/8-8UN	43.3	F25	2077	278	20105	380	430	95
24"(DN600)	267	815	749.3	692.2	16-Φ34.9	4-1 1/4-8UN	48.1	F25	4200	420	28952	445	495	95
28"(DN700)	292	835	795.3	762	40-Φ22.2	/	45	F25	4800	530	42038	490	540	100
32"(DN800)	318	940	900.1	870	48-Φ22.2	/	46.6	F25	8000		54900	541	590	125
36"(DN900)	330	1055	1009.6	972	44-Φ25.4	/	52.9	F25	11000		69490	617	670	125
40"(DN1000)	410	1175	1120.8	1080	44-Φ28.6	/	56.1	F30	13800		80420	677	735	125
48"(DN1200)	470	1390	1335.1	1289	44-Φ31.8	/	65.6	F30	18920		123600	790	845	150

Edmund

VALVE COMPANY (1965) LTD
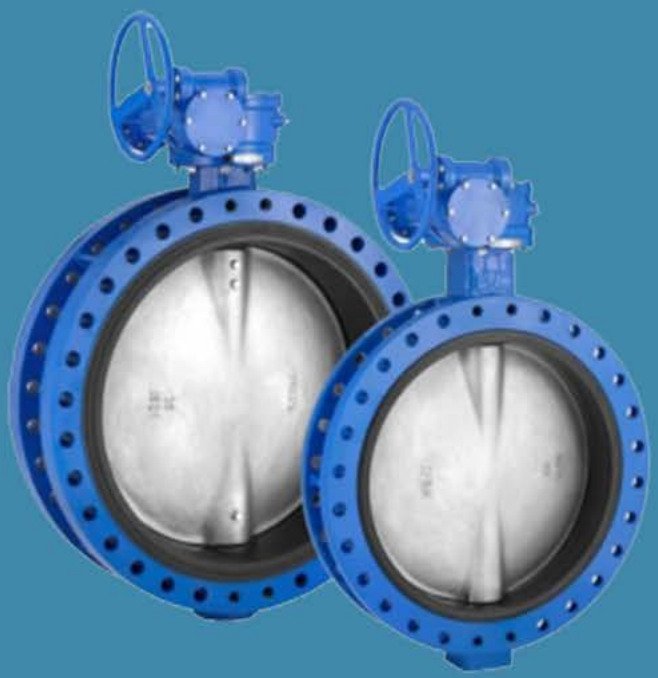
UNIT 26 SPRINGVALE INDUSTRIAL ESTATE
CWMBRAN
NP44 5BD
UNITED KINGDOM
TEL: 0800 141 2148
EMAIL : SALES@EDMUNDVALVE.COM